STATE OF VERMONT
AGENCY OF TRANSPORTATION

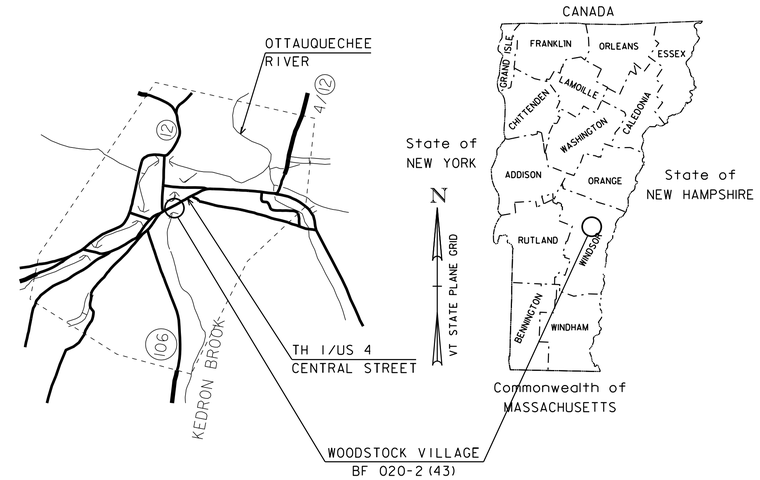

PROPOSED IMPROVEMENT
BRIDGE PROJECT

TOWN OF WOODSTOCK VILLAGE
COUNTY OF WINDSOR

ROUTE NO: TH 1/US 4 (CLASS 1), VILLAGE PRINCIPAL ARTERIAL, BRIDGE NO: BR 51

PROJECT LOCATION: ON US 4 APPROXIMATELY 0.2 MILES EAST OF THE JUNCTION WITH VT ROUTE 106 (OVER KEDRON BROOK)

PROJECT DESCRIPTION: REPLACEMENT OF EXISTING SUPERSTRUCTURE

LENGTH OF STRUCTURE:	36.94 FEET
LENGTH OF ROAD:	0.00 FEET
LENGTH OF PROJECT:	36.94 FEET

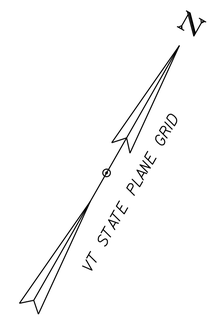

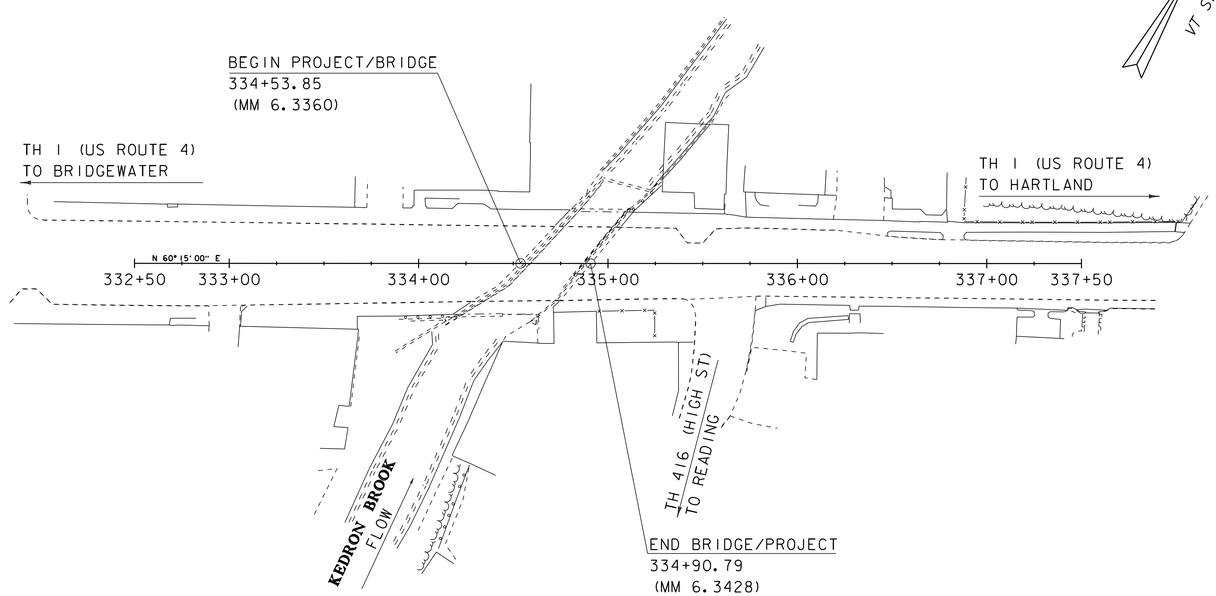

SCALE 1" = 40'-0"
40 0 40

FINAL PLANS

11-APR-2017

CONSTRUCTION IS TO BE CARRIED ON IN ACCORDANCE WITH THESE PLANS AND THE STANDARD SPECIFICATIONS FOR CONSTRUCTION DATED 2011, AS APPROVED BY THE FEDERAL HIGHWAY ADMINISTRATION ON JULY 20, 2011 FOR USE ON THIS PROJECT, INCLUDING ALL SUBSEQUENT REVISIONS AND SUCH REVISED SPECIFICATIONS AND SPECIAL PROVISIONS AS ARE INCORPORATED IN THESE PLANS.

QUALITY ASSURANCE PROGRAM : LEVEL 2

SURVEYED BY : RG
SURVEYED DATE : 5-23-2014

DATUM
VERTICAL NAVD 88
HORIZONTAL NAD 83 (2011)

DEPARTMENT OF TRANSPORTATION
FEDERAL HIGHWAY ADMINISTRATOR
APPROVED _____ DATE _____

DIRECTOR OF PROJECT DELIVERY
APPROVED _____ DATE _____

PROJECT MANAGER : ROB YOUNG, P.E.

PROJECT NAME : WOODSTOCK VILLAGE
PROJECT NUMBER : BF 020-2 (43)

SHEET 1 OF 51 SHEETS

STATE OF VERMONT
AGENCY OF TRANSPORTATION

PRELIMINARY INFORMATION SHEET (BRIDGE)

Version
LRFD

INDEX OF SHEETS

PLAN SHEETS

1	TITLE SHEET
2	PRELIMINARY INFORMATION SHEET
3 - 4	GENERAL NOTES
5	BRIDGE TYPICAL SECTION
6	TYPICAL ABUTMENT EARTHWORKS SECTION
7 - 8	QUANTITY SHEETS
9	SYMBOLOGY LEGEND
10	TIE SHEET
11	LAYOUT SHEET
12	MAINLINE PROFILE
13	SIDEWALK DETAILS
14	UTILITY LAYOUT
15	SIGN AND PAVEMENT MARKINGS SHEET
16	RAIL LAYOUT
17	LEFT RAILING PROFILE
18	RIGHT RAILING PROFILE
19	RAILING SECTIONS
20	PEDESTRIAN TRAFFIC CONTROL LAYOUT SHEET
21	PHASE 1 TRAFFIC CONTROL LAYOUT SHEET
22	LOCAL DETOUR
23	REGIONAL TRUCK DETOUR
24	BRIDGE SEAT 1
25	BRIDGE SEAT 2
26	BRIDGE SEAT REINFORCEMENT
27	UTILITY CONDUIT ELEVATION
28	RETAINING WALL
29	WINGWALL 3
30	SOLID SLAB FRAMING PLAN
31	SOLID SLAB TYPICAL SECTION
32 - 33	SOLID SLAB DETAILS
34	ELASTOMERIC BEARING DETAILS
35	BRIDGE SIDEWALK LAYOUT
36	BRIDGE SIDEWALK DETAILS
37	APPROACH SLAB 1
38	APPROACH SLAB 2
39	REINFORCING STEEL SCHEDULE
40 - 41	MAINLINE CROSS SECTIONS
42 - 45	CHANNEL CROSS SECTIONS
46	EPSC EXISTING SITE PLAN
47	EPSC PLAN
48	EPSC DETAILS
49	EPSC NARRATIVE
50	ROW DETAIL SHEET #1
51	ROW LAYOUT SHEET 1 OF 1

STANDARDS LIST

C-2A	PORTLAND CEMENT CONCRETE SIDEWALK DRIVE ENTRANCES WITH SIDEWALK ADJACENT TO CURB	10-14-2005
C-10	CURBING	02-11-2008
E-173	PULL BOXES AND JUNCTION BOXES	08-09-1995
E-193	PAVEMENT MARKING DETAILS	08-18-1995
T-45	SQUARE TUBE SIGN POST AND ANCHOR	01-02-2013

STRUCTURES DETAIL SHEETS

SD-502.00	CONCRETE DETAILS AND NOTES	5/7/2010

FINAL HYDRAULIC REPORT

HYDROLOGIC DATA

Date: May 2016

DRAINAGE AREA : 16.0 sq. mi.
CHARACTER OF TERRAIN : Hilly, mixture woods and open, rural and urban settings
STREAM CHARACTERISTICS : Incised, sinuous and alluvial
NATURE OF STREAMBED : Gravel and cobbles

PEAK FLOW DATA - ANNUAL EXCEEDANCE PROBABILITY (AEP)

43% =	700 cfs	2% =	2500 cfs
10% =	1500 cfs	1% =	3000 cfs
4% =	2000 cfs	0.2% =	4200 cfs

DATE OF FLOOD OF RECORD: Unknown
ESTIMATED DISCHARGE: Unknown
WATER SURFACE ELEV.: Unknown
NATURAL STREAM VELOCITY : @ 2% AEP = 10.3 fps
ICE CONDITIONS : Moderate
DEBRIS: Light to moderate
DOES THE STREAM REACH MAXIMUM HIGHWATER ELEV. RAPIDLY? No
IS ORDINARY RISE RAPID? No
IS STAGE AFFECTED BY UPSTREAM OR DOWNSTREAM CONDITIONS? Yes
IF YES, DESCRIBE: Small dam downstream that backwaters this site

WATERSHED STORAGE: <1%
HEADWATERS:
UNIFORM: X
IMMEDIATELY ABOVE SITE:

EXISTING STRUCTURE INFORMATION

STRUCTURE TYPE: Concrete T-beam
YEAR BUILT: 1935
CLEAR SPAN(NORMAL TO STREAM): 21'
VERTICAL CLEARANCE ABOVE STREAMBED: 10.3'
WATERWAY OF FULL OPENING: 212 sq. ft.
DISPOSITION OF STRUCTURE: Remove and replace superstructure
TYPE OF MATERIAL UNDER SUBSTRUCTURE: See borings

WATER SURFACE ELEVATIONS AT:

43% AEP =	691.2'	VELOCITY =	5.0 fps
10% AEP =	694.4'	"	7.5 fps
4% AEP =	695.9'	"	9.4 fps
2% AEP =	697.3'	"	10.7 fps
1% AEP =	698.3'	"	11.1 fps

LONG TERM STREAMBED CHANGES: None noted

IS THE ROADWAY OVERTOPPED BELOW 1% AEP: Yes
FREQUENCY: Below 2% AEP
RELIEF ELEVATION: 697.2'
DISCHARGE OVER ROAD @ 1% AEP: 430 cfs

UPSTREAM STRUCTURE

TOWN: Woodstock
DISTANCE: 400'
HIGHWAY # :
STRUCTURE #:
CLEAR SPAN:
CLEAR HEIGHT:
YEAR BUILT:
FULL WATERWAY:
STRUCTURE TYPE: Pedestrian Bridge

DOWNSTREAM STRUCTURE

TOWN: Woodstock Village
DISTANCE: 470'
HIGHWAY # : TH 5
STRUCTURE #: 71
CLEAR SPAN: 25'
CLEAR HEIGHT:
YEAR BUILT: 1950
FULL WATERWAY:
STRUCTURE TYPE: Concrete T-beam bridge

LRFR LOAD RATING FACTORS

LOADING LEVELS	TRUCK						
	H-20	HL-93	3S2	6 AXLE	3A. STR.	4A. STR.	5A. SEMI
TONNAGE	20	36	36	66	30	34.5	38
INVENTORY							
POSTING							
OPERATING							
COMMENTS:							

PROPOSED STRUCTURE

STRUCTURE TYPE: Prestressed Solid Slab

CLEAR SPAN(NORMAL TO STREAM): 21'
VERTICAL CLEARANCE ABOVE STREAMBED: 10.3'
WATERWAY OF FULL OPENING: 212 sq. ft.

WATER SURFACE ELEVATIONS AT:

43% AEP =	691.2'	VELOCITY=	5.0 fps
10% AEP =	694.4'	"	7.5 fps
4% AEP =	695.9'	"	9.4 fps
2% AEP =	697.3'	"	10.7 fps
1% AEP =	698.3'	"	11.1 fps

IS THE ROADWAY OVERTOPPED BELOW 1% AEP: Yes
FREQUENCY: Below 2% AEP
RELIEF ELEVATION: 697.2'
DISCHARGE OVER ROAD @ 1% AEP: 430 cfs

BRIDGE LOW CHORD ELEVATION: 694.3'
FREEBOARD: @ 2% AEP = -3.0'

SCOUR: Calculated scour @ 2% AEP = 5.7'. Minimum design value = 6.0'

REQUIRED CHANNEL PROTECTION: Stone Fill, Type IV

PERMIT INFORMATION

AVERAGE DAILY FLOW:	-	DEPTH OR ELEVATION:
ORDINARY LOW WATER:	-	-
ORDINARY HIGH WATER:	-	-

TEMPORARY BRIDGE REQUIREMENTS

STRUCTURE TYPE:
CLEAR SPAN (NORMAL TO STREAM):
VERTICAL CLEARANCE ABOVE STREAMBED:
WATERWAY AREA OF FULL OPENING:

ADDITIONAL INFORMATION

TRAFFIC MAINTENANCE NOTES

1. MAINTAIN TRAFFIC ON AN OFF SITE DETOUR.
2. TRAFFIC SIGNALS ARE NOT NECESSARY.
3. SIDEWALKS ARE NOT NECESSARY

DESIGN VALUES

1.	DESIGN LIVE LOAD		HL-93
2.	FUTURE PAVEMENT	d_p:	3.0 INCH
3.	DESIGN SPAN	L:	VARIES FT
4.	MIN. MID-SPAN POS. CAMBER @ RELEASE (PRESTRESSED UNITS)	Δ:	- - -
5.	PRESTRESSING STRAND (0.60 INCH DIAMETER - LOW RELAX)	f_y:	270 KSI
6.	PRESTRESSED CONCRETE STRENGTH	f'_c:	- - -
7.	PRESTRESSED CONCRETE RELEASE STRENGTH	f'_{ci}:	- - -
8.	CONCRETE, HIGH PERFORMANCE CLASS AA	f'_c:	- - -
9.	CONCRETE, HIGH PERFORMANCE CLASS A	f'_c:	4.0 KSI
10.	CONCRETE, HIGH PERFORMANCE CLASS B	f'_c:	- - -
11.	CONCRETE, CLASS C	f'_c:	- - -
12.	REINFORCING STEEL	f_y:	60 KSI
13.	STRUCTURAL STEEL AASHTO M270	f_y:	- - -
14.	NOMINAL BEARING RESISTANCE OF SOIL	q_n:	- - -
15.	SOIL BEARING RESISTANCE FACTOR (REFER TO AASHTO LRFD)	ϕ:	- - -
16.	NOMINAL BEARING RESISTANCE OF ROCK	q_n:	- - -
17.	ROCK BEARING RESISTANCE FACTOR (REFER TO AASHTO LRFD)	ϕ:	- - -
18.	PILE RESISTANCE FACTOR	ϕ:	- - -
19.	LATERAL PILE DEFLECTION	Δ:	- - -
20.	BASIC WIND SPEED	V_{3s}:	- - -
21.	MINIMUM GROUND SNOW LOAD	p_g:	- - -
22.	SEISMIC DATA PGA: 0	S_s:	- - -
		S_1:	- - -
23.			
24.			- - -
25.			- - -
26.			- - -

AS BUILT "REBAR" DETAIL

LEVEL I	LEVEL II	LEVEL III
TYPE:	TYPE:	TYPE:
GRADE:	GRADE:	GRADE:

TRAFFIC DATA

YEAR	ADT	DHV	% D	% T	ADTT
2017	10000	1100	55	3.1	450
2037	10600	1200	55	4.6	700

20 year ESAL for flexible pavement from 2017 to 2037 : 3867000
40 year ESAL for flexible pavement from 2017 to 2057 : 8988000
Design Speed : 25 mph

PROJECT NAME: **WOODSTOCK VILLAGE**
PROJECT NUMBER: **BF 020-2(43)**

FILE NAME: s13j280pi.dgn
PROJECT LEADER: R. YOUNG
DESIGNED BY: S. COLEY
PRELIMINARY INFORMATION SHEET

PLOT DATE: 11-APR-2017
DRAWN BY: S. COLEY
CHECKED BY: W. LAMMER
SHEET 2 OF 51

GENERAL

1. ALL MATERIALS AND CONSTRUCTION SHALL CONFORM TO THE VERMONT AGENCY OF TRANSPORTATION 2011 STANDARD SPECIFICATIONS FOR CONSTRUCTION, THE 2014 AASHTO LFRD BRIDGE DESIGN SPECIFICATIONS, AND THEIR LATEST REVISIONS.

2. ALL DIMENSIONS SHOWN IN THE PLANS ARE HORIZONTAL OR VERTICAL AND ARE GIVEN AT 68 DEGREES FAHRENHEIT UNLESS NOTED OTHERWISE.

3. NO ADJUSTMENTS TO THE BITUMINOUS WEARING SURFACE ON THE BRIDGE SHALL BE MADE TO ACCOUNT FOR THE DIFFERENCE BETWEEN BEAM CAMBER AND THE THEORETICAL ROADWAY PROFILE. THE WEARING SURFACE SHALL BE SHIMMED TRANSVERSELY AS NECESSARY TO ACCOUNT FOR POTENTIAL DIFFERENTIAL CAMBER OF THE ADJACENT BEAMS.

4. THE REMOVAL OF EXISTING SUPERSTRUCTURE AND BRIDGE RAIL WILL BE PAID FOR UNDER ITEM 529.15, 'REMOVAL OF STRUCTURE'. THIS WORK SHALL INCLUDE REMOVAL OF THE ENTIRE SUPERSTRUCTURE AND ANY PORTIONS OF THE EXISTING ABUTMENTS NECESSARY TO ADJUST THE BRIDGE SEAT ELEVATIONS. CONCRETE REMOVAL AROUND THE EXISTING UTILITY CONDUITS AND LOWERING TO THE LOCATION SPECIFIED IN THE PLANS IS INCLUDED UNDER ITEM 529.15, "REMOVAL OF STRUCTURE". REPAIRS AND OR REPLAEMENT TO THE CONDUIT WILL BE THE RESPONSIBILITY OF FAIRPOINT COMMUNICATION.

5. THE CONTRACTOR SHALL SUBMIT TO THE RESIDENT ENGINEER A DEMOLITION PLAN SPECIFICALLY ADDRESSING THE STEPS TO DROP THE FOUR OCCUPIED UTILITY CONDUITS BELOW THE EXISTING BRIDGE SEAT.

6. FOR INFORMATION REGARDING UTILITIES, SEE THE SPECIAL PROVISIONS.

7. THE CONTRACTOR SHALL CONTACT THE WOODSTOCK GARDEN CLUB FOR THE REMOVAL BY OTHERS OF THE FLOWER BOXES ON THE BRIDGE.

8. THESE PLANS WERE PREPARED BASED ON THE INFORMATION OBTAINED FROM A SURVEY COMPLETED BY VTRANS AND FROM HISTORICAL PLANS FROM THE 1935 REHABILITATION OF THE STRUCTURE. THE CONTRACTOR MAY BE REQUIRED TO MAKE CHANGES TO THE DIMENSIONS SHOWN ON THE PLANS TO FIT THE ACTUAL FIELD CONDITIONS. THE CONTRACTOR SHALL FIELD VERIFY ALL DIMENSIONS PRIOR TO FABRICATION.

9. US ROUTE 4 (CENTRAL STREET) IS UNDERLAIN WITH CONCRETE PAVEMENT. THESE PLANS HAVE BEEN DEVELOPED BASED ON THE LOCATION OF PAVEMENT CRACKS THAT MAY INDICATE THE SECTIONS IN THE CONCRETE PAVEMENT. ADJUSTMENT IN THE FIELD MAY BE REQUIRED TO ADJUST THE BEGIN AND END APPROACH OF THE PROJECT.

10. REMOVAL OF THE EXISTING CURB AND SIDEWALK, AND EXCAVATION REQUIRED UNDER THE CURB AND SIDEWALK SHALL BE PAID FROM UNDER THE ITEM 203.17 "UNCLASSIFIED EXCAVATION".

TRAFFIC CONTROL

11. TRAFFIC MANAGEMENT WILL BE ACCOMPLISHED USING AN OFF-SITE LOCAL DETOUR ON PLEASANT STREET AND ELM STREET, AND A TRUCK DETOUR ON VT 106/VT 44/US 5/ VT 12 DURING A THREE WEEK BRIDGE CLOSURE PERIOD. A BICYCLE/PEDESTRIAN DETOUR VIA LOCAL ROADS WILL BE SIGNED AS SHOWN. REFER TO THE TRAFFIC CONTROL SHEET FOR ADDITIONAL TRAFFIC CONTROL NOTES.

CONCRETE

12. ALL LIFTING POINTS IN THE SUPERSTRUCTURE SHALL BE REMOVABLE TO THE MINIMUM CLEAR COVER FOR REINFORCING STEEL SPECIFIED IN THE PLANS. THE LIFTING POINTS SHALL BE DETAILED IN THE FABRICATION DRAWING. PAYMENT FOR THIS WORK WILL BE CONSIDERED INCIDENTAL TO THE APPROPRIATE PRECAST ITEM.

13. ALL RECESSED LIFTING POINTS AND BLOCKOUTS SHALL BE FILLED WITH A TYPE IV MORTAR PER SUBSECTION 707.03 PAYMENT WILL BE CONSIDERED INCIDENTAL TO THE APPROPRIATE PRECAST ITEM.

14. THE METHOD OF FORMING FOR SUBSEQUENT POURS AFTER PLACING PRECAST/PRESTRESSED SUPERSTRUCTURE UNITS SHALL BE DETERMINED BY THE CONTRACTOR. THE CONTRACTOR IS ENCOURAGED TO WORK WITH THE FABRICATOR IF ADDITIONAL SUPPORTS ARE REQUIRED. IN NO CASE SHALL THE CONTRACTOR ATTACH ADDITIONAL FORM OR SCREED SUPPORTS BY DRILLING OR SIMILAR MEANS INTO ANY PRECAST/PRESTRESSED SUPERSTRUCTURE UNIT.

15. ALL FORM SUPPORTS AND FORM TIES THAT ARE TO REMAIN PERMANENTLY IN THE CONCRETE ABOVE THE BRIDGE SEAT SHALL BE GALVANIZED AND CONFORM TO SECTION 726 OF THE STANDARD SPECIFICATIONS.

16. BRIDGE RAIL SHALL BE CONCRETE, HIGH PERFORMANCE CLASS A AND WILL BE PAID UNDER ITEM 900.640, "SPECIAL PROVISION (BRIDGE RAILING, TEXAS)". THE EFFECTIVE CURE TIME OF THE BRIDGE RAIL MAY BE REDUCED TO A MINIMUM OF (7) SEVEN DAYS PROVIDED THAT THE CONCRETE HAS REACHED 85% OF THE COMPRESSIVE STRENGTH.

17. BRIDGE RAIL SHALL NOT BE POURED UNTIL THE CONCRETE IN THE LONGITUDINAL CLOSURE POUR BETWEEN THE BEAMS HAS REACHED A MINIMUM STRENGTH OF 4,000 PSI.

18. WATER REPELLENT, SILANE SHALL BE APPLIED TO ALL EXPOSED CONCRETE SURFACES, EXCEPT THE UNDERSIDE OF THE SUPERSTRUCTURE BETWEEN DRIP NOTCHES.

19. ALL EXPOSED EDGES SHALL HAVE A 1"X1" CHAMFER UNLESS OTHERWISE NOTED.

20. HIGH PERFORMANCE CONCRETE, RAPID SET SHALL BE WET-CURED UNTIL IT HAS OBTAINED THE FOLLOWING COMPRESSIVE STRENGTH AS VERIFIED BY TESTING OF FIELD CYLINDERS:
    - SUPERSTRUCTURE AND APPROACH SLAB CLOSURE POURS: 4,000 PSI

REINFORCING STEEL

21. ALL REINFORCING STEEL SHALL BE DETAILED AND FABRICATED USING PROCEDURES AND TOLERANCES IN ACCORDANCE WITH APPLICABLE PUBLICATIONS OF THE CONCRETE REINFORCING STEEL INSTITUTE.

22. TEST BARS SHALL BE PROVIDED IN ACCORDANCE WITH THE "VERMONT AGENCY OF TRANSPORTATION MATERIAL SAMPLING MANUAL" AVAILABLE ON THE AGENCY WEBSITE. A MINIMUM OF TWO TEST SECTIONS ARE REQUIRED FOR EACH SIZE, BRAND, AND GRADE OR TYPE OF REINFORCING. SEE THE MANUAL FOR ACCEPTABLE DIMENSIONS OF TEST SECTIONS. ALL COSTS ASSOCIATED WITH PROVIDING BARS FOR TESTING WILL BE INCLUDED IN THE UNIT PRICE BID FOR THE APPROPRIATE PRECAST ITEM.

23. ALL REINFORCING STEEL IN THE PRECAST SUPERSTRUCTURE, SIDEWALK ATTACHED TO THE PRECAST SUPERSTRUCTURE, APPROACH SLABS, AND BRIDGE RAIL SHALL MEET THE REQUIREMENTS OF SECTION 507 FOR "REINFORCING STEEL, LEVEL III" AND WILL BE INCLUDED IN THE UNIT PRICE BID FOR THE APPROPRIATE CONCRETE ITEM.

24. ALL REINFORCING STEEL IN THE PRECAST SUPERSTRUCTURE AND APPROACH SLAB CLOSURE POURS SHALL MEET THE REQUIREMENTS OF SECTION 507 FOR "REINFORCING STEEL, LEVEL III" AND WILL BE PAID FOR UNDER ITEM 507.13 "REINFORCING STEEL, LEVEL III".

25. ALL REINFORCING STEEL IN THE BRIDGE SEAT, WINGWALL AND RETAINING WALL SHALL MEET THE REQUIREMENTS OF SECTION 507 FOR "REINFORCING STEEL, LEVEL III" AND WILL BE INCLUDED IN THE UNIT PRICE BID FOR ITEM 507.13 "REINFORCING STEEL, LEVEL III".

26. REINFORCING STEEL PLACEMENT TOLERANCES SHALL BE:
    SPACING: +/- 1 INCH
    CLEARANCE: +/- 1/4 INCH

PRECAST SOLID SLAB BEAMS

27. DESIGN VALUES ARE SHOWN IN THE TABLE ON GENERAL NOTES 2 SHEET.

28. THE FABRICATOR SHALL PROVIDE A CALCULATED CAMBER ESTIMATE FOR EACH OF THE PRECAST SOLID SLAB BEAMS AT RELEASE, ERECTION, AND FINAL CONDITIONS PRIOR TO ANY SUPERIMPOSED LOADING OF THE BEAMS. THE FABRICATOR SHALL SUBMIT THE CALCULATIONS WITH THE FABRICATION DRAWINGS AND ALL ASSOCIATED COSTS WILL BE CONSIDERED INCIDENTAL TO ITEM 900.640 SPECIAL PROVISION (PRESTRESSED CONCRETE SOLID SLABS).

29. IF THE FABRICATOR PROVIDED CAMBER ESTIMATE OR THE MEASURED CAMBER EXCEEDS THE CAMBER TOLERANCES SPECIFIED IN THE CONTRACT DOCUMENTS THEN THIS MAY BE REQUIRED TO BE ADDRESSED THROUGH A NON-CONFORMANCE REPORT (NCR), AT THE DISCRETION OF THE STRUCTURAL CONCRETE ENGINEER. AT A MINIMUM THE NCR MUST INCLUDE A DESCRIPTION OF THE CAMBER VARIANCE, THE CAUSE(S) OF THE CAMBER VARIANCE, PROPOSED ACTION TO CORRECT OR MITIGATE THE CAMBER VARIANCE, AND QC PROCEDURES THAT WILL PREVENT FUTURE REOCCURRENCES. THE FABRICATOR SHALL WORK WITH THE CONTRACTOR IN DEVELOPING A PROPOSED ACTION TO CORRECT OR MITIGATE THE OUT OF TOLERANCE CAMBER AT NO ADDITIONAL COST TO THE STATE.

30. THE FABRICATOR MAY ALTER THE DESIGN AS DETAILED IN THE PLANS TO ACCOMMODATE THEIR SPECIFIC OPERATION. THIS ALTERATION SHALL BE DESIGNED BY A PROFESSIONAL ENGINEER LICENSED IN STATE OF VERMONT TO MEET SPECIFIED CRITERIA AND SHALL BE APPROVED BY THE PROJECT MANAGER.

31. CLEAR COVER ON THE REINFORCING STEEL SHALL BE ACCORDING TO THE FOLLOWING, UNLESS NOTED OTHERWISE:

LOCATION	CLEAR COVER (INCHES)
UNDERSIDE OF SUPERSTRUCTURE	1.5
EXPOSED TO EARTH OR WEATHER	2.0
TOP OF FRAME AND APPROACH SLABS	2.5
DIRECT EXPOSURE TO DEICING SALTS (FASCIA AND CURB)	3.0
CAST AGAINST EARTH	3.0

32. NO HOLES MAY BE DRILLED IN ANY PRECAST ELEMENTS WITHOUT THE APPROVAL OF THE FABRICATOR AND THE AGENCY.

33. REINFORCING STEEL FROM THE SOLID SLABS INTO THE BRIDGE SIDEWALK SHALL BE CONTINUOUS AND NEITHER SPLICED NOR JOINED WITH A MECHANICAL CONNECTOR.

34. THE CONCRETE EDGES ALONG THE LONGITUDINAL CLOSURE POURS SHALL BE TREATED TO PROVIDE A ROUGHENED/ EXPOSED AGGERGATE SURFACE. THE AMPLITUDE OF THE EXPOSED AGGREGATE SHALL BE A MINIMUM OF 1/8" AND BE COMPLETED PRIOR TO ERECTION OF THE BEAMS. THE FABRICATOR SHALL INDICATE THE METHOD USED TO ACHIEVE THIS PROFILE ON THE FABRICATION DRAWING AND THE METHOD USED TO PROTECT THE REINFORCING STEEL.

35. THE CONCRETE FOR LONGITUDINAL CLOSURE POURS SHALL BE ITEM 900.608 "SPECIAL PROVISION (HIGH PERFORMANCE CONCRETE, RAPID SET) (FPQ)" AND WILL BE PAID UNDER ITEM 900.608 "SPECIAL PROVISION (HIGH PERFORMANCE CONCRETE, RAPID SET) (FPQ)".

36. THE LONGITUDINAL CLOSURE POUR CONCRETE SHALL OBTAIN A STRENGTH OF 4,000 PSI PRIOR TO ANY VEHICULAR LOADING.

APPROACH SLABS

37. APPROACH SLAB CONCRETE STRENGTH: f'c = 5,000 PSI.

38. CORRUGATED POST-TENSIONING DUCTS IN THE PRECAST APPROACH SLABS FOR DOWEL CONNECTIONS SHALL BE CONSTRUCTED FROM EITHER POLYETHYLENE OR POLYPROPYLENE. THE DUCT SHALL HAVE A MINIMUM MATERIAL THICKNESS OF 0.080 IN. +/- 0.010 IN. AND SHALL HAVE A WHITE COATING ON THE OUTSIDE OR SHALL BE OF WHITE MATERIAL WITH UNTRAVIOLET STABILIZERS ADDED. POLYETHYLENE DUCT SHALL BE FABRICATED FROM RESINS MEETING OR EXCEEDING THE REQUIREMENTS OF ASTM D 3350 WITH A CELL CLASSIFICATION OF 345464A. POLYPROPYLENE DUCT SHALL BE FABRICATED FROM RESINS MEETING OR EXCEEDING THE REQUIREMENTS OF ASTM D 4101 WITH A CELL CLASSIFICATION RANGE OF PP0340B44544 TO PP340B65884. ALL COSTS ASSOCIATED WITH PLACING THE DUCT WILL BE INCLUDED IN THE BID PRICE FOR THE APPROPRIATE PRECAST APPROACH SLAB OPTION.

39. GROUT USED TO FILL DOWEL DUCTS IN THE PRECAST APPROACH SLABS FOR DOWEL CONNECTIONS SHALL BE MORTAR, TYPE IV IN ACCORDANCE WITH SECTION 540 – PRECAST CONCRETE. ALL COSTS ASSOCIATED WITH PROVIDING AND PLACING GROUT FOR THE APPROACH SLAB DOWEL CONNECTIONS WILL BE INCLUDED IN THE BID PRICE FOR THE APPROPRIATE PRECAST APPROACH SLAB OPTION.

PEDESTRIAN HAND RAILING

40. THE MINIMUM HEIGHT OF THE PEDESTRIAN RAILING SHALL BE 42 INCHES MEASURED FROM THE TOP OF THE SIDEWALK TO THE TOP OF THE UPPER RAIL MEMBER. FROM THE TOP OF THE SIDEWALK TO A LINE 27 INCHES ABOVE IT, ALL ELEMENTS OF THE RAILING ASSEMBLY SHALL BE SPACED SUCH THAT A 6-INCH SPHERE WILL NOT PASS THROUGH ANY OPENING. FOR ELEMENTS BETWEEN 27 AND 42 INCHES ABOVE THE WALKING SURFACE, ELEMENTS SHALL BE SPACED SUCH THAT AN 8-INCH SPHERE WILL NOT PASS THROUGH ANY OPENING.

41. THE MINIMUM DESIGN LOADING FOR PEDESTRIAN RAILING SHALL BE W = 50 POUNDS PER LINEAR FOOT, TRANSVERSELY AND VERTICALLY, ACTING SIMULTANEOUSLY. IN ADDITION, EACH LONGITUDINAL ELEMENT SHALL BE DESIGNED FOR A CONCENTRATED LOAD OF 20 POUNDS ACTING SIMULTANEOUSLY WITH THE ABOVE LINEAR LOADS AT ANY POINT AND IN ANY DIRECTION AT THE TOP OF THE LONGITUDINAL ELEMENT.

42. POSTS SHALL BE DESIGNED FOR A TRANSVERSE LOAD OF P.LL ACTING AT THE CENTER OF GRAVITY OF THE UPPER LONGITUDINAL ELEMENT. P.LL (IN POUNDS) SHALL BE TAKEN AS: P.LL = 200 + 50L, WHERE L IS THE POST SPACING IN FEET.

MISCELLANEOUS

43. EPSC EXISTING CONDITIONS SHEET AND EPSC PLAN SHEET HAVE BEEN INCLUDED AS A REFERENCE.

44. ITEM 404.65 "EMULSIFIED ASPHALT" IS TO BE APPLIED AT A RATE OF 0.080 GAL/SY BETWEEN SUCCESSIVE COURSES OF PAVEMENT AND ON ALL COLD PLANED SURFACES OR AS DIRECTED BY THE ENGINEER.

45. ITEM 520.10, "MEMBRANE WATERPROOFING, SPRAY APPLIED" SHALL BE APPLIED TO THE BRIDGE DECK AS PER THE MANUFACTURER'S INSTRUCTIONS AND EXTEND ONTO THE APPROACH SLABS 2 FEET BEYOND THE BEGIN BRIDGE/END OF BRIDGE.

46. THE SIGN ATTACHED TO THE METAL RAILING NEAR STATION 334+60 RT SHALL BE REMOVED IN A WORKMAN-LIKE MANNER AND PROVIDED TO THE PROPERTY OWNER. THIS WORK WILL BE PAID UNDER ITEM 675.50 "REMOVING SIGNS."

Design Values

a. Concrete Compressive Strength = 6,000 psi

b. Concrete Compressive Strength at Release

c. Prestressing Strands: 0.6 inch diameter, low-relaxation 7-wire strands

d. Assumed Modulus of Elasticity = 28,500 ksi

e. Prestressing strands shall each be pulled to have a net tension of 44.0 kips after accounting for chuck slippage

f. Service loads

Solid Slab	Concrete Release Strength (psi)	Service Loads						Estimated	
		Member Moment (k-ft)	Superimposed Dead Load Moment (k-ft)	Live Load and Impact Moment (k-ft)	Dead Load Reaction (kips)	Live Load and Impact Reaction (kips)	Total Reaction (Kips)	Camber at Release (inches)	Final Camber (inches)
1	4000	83.63	63.88	75.95	102.13	39.55	160.4	7/16	3/4
2	4000	73.75	57.63	77.35	25.00	29.40	46.1	7/16	1
3	4000	63.38	52.13	82.60	25.38	44.80	60.0	3/8	1 3/16
4	4000	52.63	47.13	103.08	23.38	81.38	105.9	7/16	1 7/16
5	4000	44.50	39.63	92.58	18.75	44.80	65.0	7/16	1 9/16
6	4000	43.13	29.13	95.55	17.00	54.25	71.5	7/16	1 5/8
7	4000	43.75	21.38	108.85	14.50	93.28	105.8	7/16	1 11/16
8	4000	44.38	31.63	100.98	16.50	43.58	55.0	7/16	1 11/16
9	4000	49.25	48.88	114.63	16.63	81.20	98.1	7/16	1 11/16
10	4000	67.88	72.25	104.83	63.00	64.58	136.8	11/16	2 3/8
11	4500	65.75	59.38	119.70	30.25	87.15	114.5	9/16	2 1/2
12	4000	71.25	61.25	101.33	35.63	54.08	62.0	9/16	2 15/16
13	4000	78.50	65.13	94.85	32.38	28.00	40.4	1/2	2 7/8
14	4000	88.00	70.75	93.45	152.50	71.93	250.1	7/16	2 11/16

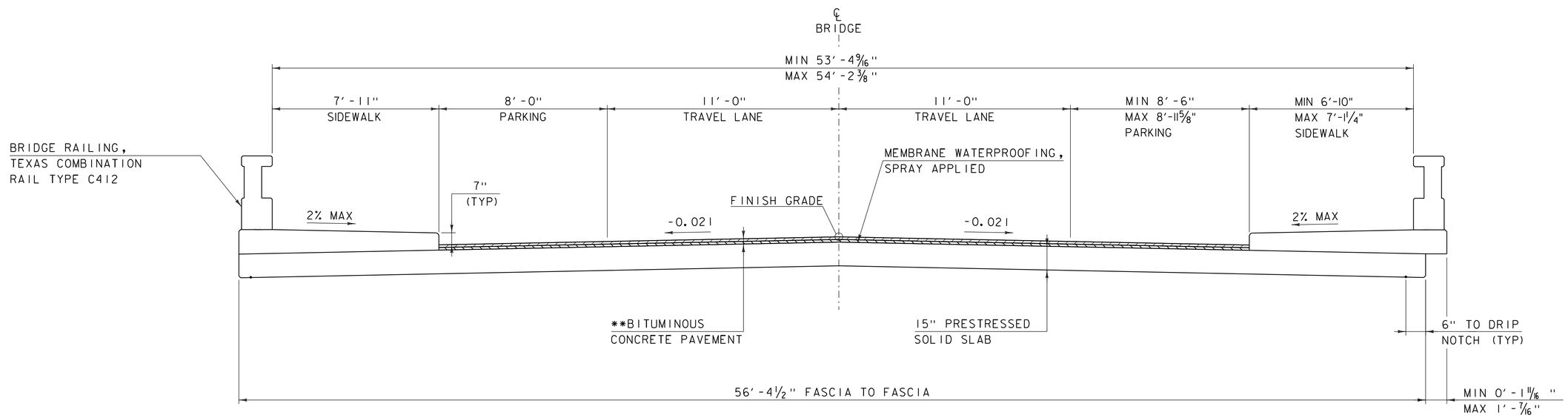

** 1 1/2" SPECIAL PROVISION (BITUMINOUS CONCRETE PAVEMENT TYPE IVB) OVER
1 1/2" SPECIAL PROVISION (BITUMINOUS CONCRETE PAVEMENT TYPE IVB)

FLOW

PROPOSED BRIDGE TYPICAL SECTION

SCALE 3/8" = 1'-0"

PROJECT NAME: WOODSTOCK VILLAGE	
PROJECT NUMBER: BF 020-2(43)	
FILE NAME: s13j280typical.dgn	PLOT DATE: 11-APR-2017
PROJECT LEADER: R. YOUNG	DRAWN BY: S. COLEY
DESIGNED BY: S. COLEY	CHECKED BY: W. LAMMER
BRIDGE TYPICAL SECTION	SHEET 5 OF 51

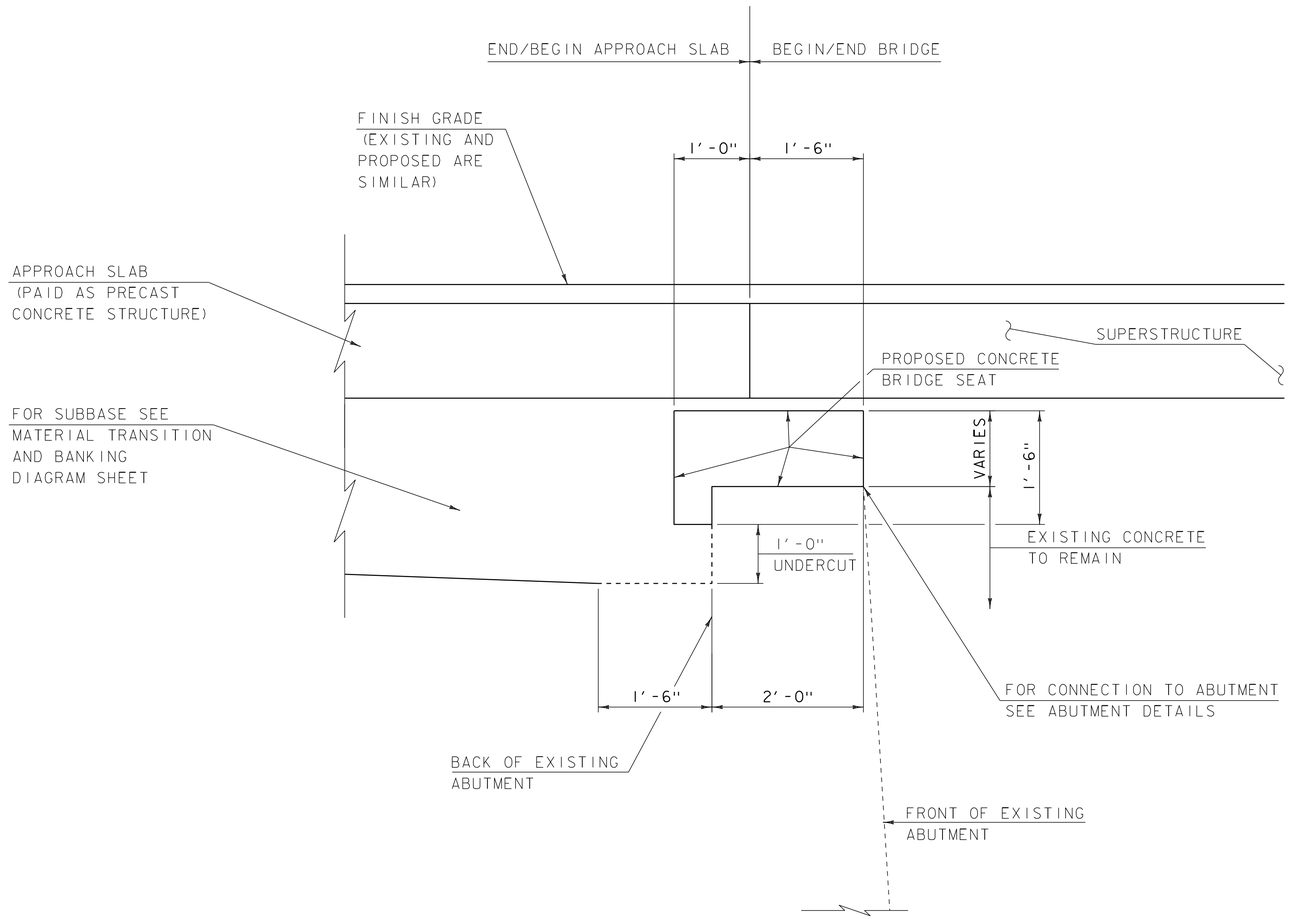

TYPICAL ABUTMENT EARTHWORK SECTION

SCALE: 1" = 1'-0"

PROJECT NAME: WOODSTOCK VILLAGE	
PROJECT NUMBER: BF 020-2(43)	
FILE NAME: s13j280typical	PLOT DATE: 11-APR-2017
PROJECT LEADER: R. YOUNG	DRAWN BY: S. COLEY
DESIGNED BY: S. COLEY	CHECKED BY: W. LAMMER
TYPICAL ABUTMENT EARTHWORKS SECTION	SHEET 6 OF 51

STATE OF VERMONT
AGENCY OF TRANSPORTATION

QUANTITY SHEET 1

SUMMARY OF ESTIMATED QUANTITIES				TOTALS		DESCRIPTIONS			
ROADWAY	EROSION CONTROL	BRIDGE	FULL CE ITEMS	GRAND TOTAL	FINAL	UNIT	ITEMS	ITEM NUMBER	ROUND
1				1		LS	CLEARING AND GRUBBING, INCLUDING INDIVIDUAL TREES AND STUMPS	201.10	
310				310		CY	COMMON EXCAVATION	203.15	
10				10		CY	TRENCH EXCAVATION OF EARTH	204.20	
220				220		CY	SUBBASE OF DENSE GRADED CRUSHED STONE	301.35	
60				60		CY	AGGREGATE SURFACE COURSE	401.10	
6				6		CWT	EMULSIFIED ASPHALT	404.65	
1				1		LU	PRICE ADJUSTMENT, ASPHALT CEMENT (N.A.B.I.)	406.50	
106				106		TON	SUPERPAVE BITUMINOUS CONCRETE PAVEMENT	490.30	
1				1		LU	AIR VOIDS PAY ADJUSTMENT (N.A.B.I.)	490.31	
		7770		7770		LB	REINFORCING STEEL, LEVEL III	507.13	
		373		373		LF	DRILLING AND GROUTING DOWELS	507.16	
		2		2		GAL	WATER REPELLENT, SILANE	514.10	
		190		190		SY	MEMBRANE WATERPROOFING, SPRAY APPLIED	520.10	
		213		213		LF	JOINT SEALER, HOT POURED	524.11	
		1		1		EACH	REMOVAL OF STRUCTURE	529.15	
160				160		CY	REMOVAL OF CONCRETE OR MASONRY	529.25	
		56		56		EACH	BEARING DEVICE ASSEMBLY, PLAIN ELASTOMERIC PAD	531.16	
							BEGIN OPTION AA		
		1		1		LS	PRECAST CONCRETE STRUCTURE (APPROACH SLAB #1)	540.10	
		1		1		LS	SPECIAL PROVISION (CONTRACTOR FABRICATED PRECAST CONCRETE STRUCTURE (APPROACH SLAB #1))	900.645	
							END OPTION AA		
							BEGIN OPTION BB		
		1		1		LS	PRECAST CONCRETE STRUCTURE (APPROACH SLAB #2)	540.10	
		1		1		LS	SPECIAL PROVISION (CONTRACTOR FABRICATED PRECAST CONCRETE STRUCTURE (APPROACH SLAB #2))	900.645	
							END OPTION BB		
		2		2		CY	REBUILT STONE MASONRY	602.35	
4				4		EACH	REHAB. DROP INLETS, CATCH BASINS, OR MANHOLES, CLASS I	604.412	
133				133		LF	VERTICAL GRANITE CURB	616.21	
120				120		SY	PORTLAND CEMENT CONCRETE SIDEWALK, 8 INCH	618.11	
2				2		EACH	ADJUST ELEVATION OF VALVE BOX	629.20	
300				300		HR	UNIFORMED TRAFFIC OFFICERS	630.10	
1200				1200		HR	FLAGGERS	630.15	
			1	1		LS	FIELD OFFICE, ENGINEERS	631.10	
			1	1		LS	TESTING EQUIPMENT, CONCRETE	631.16	
			1	1		LS	TESTING EQUIPMENT, BITUMINOUS	631.17	
			3000	3000		DL	FIELD OFFICE TELEPHONE (N.A.B.I.)	631.26	
8				8		EACH	PORTABLE CHANGEABLE MESSAGE SIGN	641.15	
79				79		LF	4 INCH WHITE LINE	646.20	
300				300		LF	4 INCH YELLOW LINE	646.21	

DETAILED SUMMARY OF QUANTITIES

QUANTITIES	UNIT	ITEMS
		EARTHWORKS SUMMARY
		FILL AVAILABLE
310	CY	COMMON EXCAVATION (340 X 1.0)
10	CY	TRENCH EXCAVATION (20X1.0)
320	CY	TOTAL FILL AVAILABLE
		FILL REQUIRED
0	CY	FILL
320	CY	TOTAL WASTE
		SUPERPAVE BITUMINOUS CONCERETE PAVEMENT
106	TONS	TYPE IIS
109	TONS	TYPE IVS
215	TONS	TOTAL

PROJECT NAME: WOODSTOCK VILLAGE
PROJECT NUMBER: BF 020-2(43)

FILE NAME: s13j280qs
PROJECT LEADER: R. YOUNG
DESIGNED BY: S. COLEY
QUANTITY SHEET 1

PLOT DATE: 11-APR-2017
DRAWN BY: S. COLEY
CHECKED BY: ------
SHEET 7 OF 51

STATE OF VERMONT
AGENCY OF TRANSPORTATION

QUANTITY SHEET 2

SUMMARY OF ESTIMATED QUANTITIES				TOTALS		DESCRIPTIONS			
ROADWAY	EROSION CONTROL	BRIDGE	FULL CE ITEMS	GRAND TOTAL	FINAL	UNIT	ITEMS	ITEM NUMBER	ROUND
206				206		LF	8 INCH WHITE LINE	646.22	
430				430		SY	GEOTEXTILE FOR ROADBED SEPARATOR	649.11	
	40			40		SY	GEOTEXTILE FOR SILT FENCE	649.51	
	80			80		SY	GEOTEXTILE FOR FILTER CURTAIN	649.61	
	30			30		SY	SODDING	651.30	
	5			5		CY	TOPSOIL	651.35	
	30			30		CY	VEHICLE TRACKING PAD	653.35	
	4			4		EACH	INLET PROTECTION DEVICE, TYPE I	653.40	
	110			110		LF	BARRIER FENCE	653.50	
1				1		LS	TREE PROTECTION	656.85	
6				6		SF	TRAFFIC SIGNS, TYPE A	675.20	
30				30		LF	SQUARE TUBE SIGN POST AND ANCHOR	675.341	
1				1		EACH	REMOVING SIGNS	675.50	
1				1		EACH	PULL BOX, STANDARD	678.25	
1				1		LU	PRICE ADJUSTMENT, FUEL (N.A.B.I.)	690.50	
		29		29		CY	SPECIAL PROVISION (HIGH PERFORMANCE CONCRETE, CLASS A LOW CEMENT)	900.608	
		43		43		CY	SPECIAL PROVISION (HIGH PERFORMANCE CONCRETE, RAPID SET)	900.608	
1				1		EACH	SPECIAL PROVISION (CPM SCHEDULE)	900.620	
1				1		EACH	SPECIAL PROVISION (INCENTIVE/DISINCENTIVE (N.A.B.I.))	900.620	
5				5		EACH	SPECIAL PROVISION (PARKING METER POSTS)	900.620	
3				3		EACH	SPECIAL PROVISION (REMOVAL OF PARKING METER POSTS)	900.620	
		128		128		LF	SPECIAL PROVISION (HISTORIC BRIDGE RAIL)(TAKEN FROM TEXAS RAIL TYPE C412)	900.640	
35				35		LF	SPECIAL PROVISION (PEDESTRIAN HAND RAILING)	900.640	
		85		85		LF	SPECIAL PROVISION (PRESTRESSED CONCRETE NON-VOIDED SLABS EXTERIOR)(15"x43.5")	900.640	
		467		467		LF	SPECIAL PROVISION (PRESTRESSED CONCRETE NON-VOIDED SLABS INTERIOR)(15"x39")	900.640	
		1		1		LS	SPECIAL PROVISION (CONSTRUCTION VIBRATION AND CRACK MONITORING)	900.645	
1				1		LS	SPECIAL PROVISION (TRAFFIC CONTROL ALL - INCLUSIVE)	900.645	
188				188		SF	SPECIAL PROVISION (REMOVE AND RESET BRICK PAVERS)	900.670	
109				109		TON	SPECIAL PROVISION (BITUMINOUS CONCRETE PAVEMENT, TYPE IVB)	900.680	

DETAILED SUMMARY OF QUANTITIES		
QUANTITIES	UNIT	ITEMS

PROJECT NAME: WOODSTOCK VILLAGE
PROJECT NUMBER: BF 020-2(43)

FILE NAME: s13j280qs
PROJECT LEADER: R. YOUNG
DESIGNED BY: S. COLEY
QUANTITY SHEET 2

PLOT DATE: 11-APR-2017
DRAWN BY: S. COLEY
CHECKED BY: ------
SHEET 8 OF 51

GENERAL INFORMATION

SYMBOLOGY LEGEND NOTE

THE SYMBOLOGY ON THIS SHEET IS INTENDED TO COVER STANDARD CONVENTIONAL SYMBOLOGY. THE SYMBOLOGY IS USED FOR EXISTING & PROPOSED FEATURES WITH HEAVIER LINEWEIGHT, IN COMBINATION WITH PROJECT ANNOTATION, AS NOTED ON PROJECT PLAN SHEETS. THIS LEGEND SHEET COVERS THE BASICS. SYMBOLOGY ON PLANS MAY VARY, PLAN ANNOTATIONS AND NOTES SHOULD BE USED TO CLARIFY AS NEEDED.

R.O.W. ABBREVIATIONS (CODES) & SYMBOLS

POINT	CODE	DESCRIPTION
	CH	CHANNEL EASEMENT
	CONST	CONSTRUCTION EASEMENT
	CUL	CULVERT EASEMENT
	D&C	DISCONNECT & CONNECT
	DIT	DITCH EASEMENT
	DR	DRAINAGE EASEMENT
	DRIVE	DRIVEWAY EASEMENT
	EC	EROSION CONTROL
	HWY	HIGHWAY EASEMENT
	I&M	INSTALL & MAINTAIN EASEMENT
	LAND	LANDSCAPE EASEMENT
	R&RES	REMOVE & RESET
	R&REP	REMOVE & REPLACE
	SR	SLOPE RIGHT
	UE	UTILITY EASEMENT
	(P)	PERMANENT EASEMENT
	(T)	TEMPORARY EASEMENT
■	BNDNS	BOUND SET
▣	BNDNS	BOUND TO BE SET
●	IPNS	IRON PIN SET
◎	IPNS	IRON PIN TO BE SET
⊠	CALC	EXISTING ROW POINT
○	PROW	PROPOSED ROW POINT
[LENGTH]		LENGTH CARRIED ON NEXT SHEET

COMMON TOPOGRAPHIC POINT SYMBOLS

POINT	CODE	DESCRIPTION
	APL	BOUND APPARENT LOCATION
	BM	BENCHMARK
	BND	BOUND
	CB	CATCH BASIN
	COMB	COMBINATION POLE
	DITHR	DROP INLET THROATED DNC
	EL	ELECTRIC POWER POLE
	FPOLE	FLAGPOLE
	GASFIL	GAS FILLER
	GP	GUIDE POST
	GSO	GAS SHUT OFF
	GUY	GUY POLE
	GUYW	GUY WIRE
	GV	GATE VALVE
	H	TREE HARDWOOD
	HCTRL	CONTROL HORIZONTAL
	HVCTRL	CONTROL HORIZ. & VERTICAL
	HYD	HYDRANT
	IP	IRON PIN
	IPIPE	IRON PIPE
	LI	LIGHT - STREET OR YARD
	MB	MAILBOX
	MH	MANHOLE (MH)
	MM	MILE MARKER
	PM	PARKING METER
	PMK	PROJECT MARKER
	POST	POST STONE/WOOD
	RRSIG	RAILROAD SIGNAL
	RRSL	RAILROAD SWITCH LEVER
	S	TREE SOFTWOOD
	SAT	SATELLITE DISH
	SHRUB	SHRUB
	SIGN	SIGN
	STUMP	STUMP
	TEL	TELEPHONE POLE
	TIE	TIE
	TSIGN	SIGN W/DOUBLE POST
	VCTRL	CONTROL VERTICAL
	WELL	WELL
	WSO	WATER SHUT OFF

THESE ARE COMMON VAOT SURVEY POINT SYMBOLS FOR EXISTING FEATURES, ALSO USED FOR PROPOSED FEATURES WITH HEAVIER LINEWEIGHT, IN COMBINATION WITH PROPOSED ANNOTATION.

PROPOSED GEOMETRY CODES

CODE	DESCRIPTION
PC	POINT OF CURVATURE
PI	POINT OF INTERSECTION
CC	CENTER OF CURVE
PT	POINT OF TANGENCY
PCC	POINT OF COMPOUND CURVE
PRC	POINT OF REVERSE CURVE
POB	POINT OF BEGINNING
POE	POINT OF ENDING
STA	STATION PREFIX
AH	AHEAD STATION SUFFIX
BK	BACK STATION SUFFIX
D	CURVE DEGREE OF (100FT)
R	CURVE RADUIS OF
T	CURVE TANGENT LENGTH
L	CURVE LENGTH OF
E	CURVE EXTERNAL DISTANCE

UTILITY SYMBOLOGY

UNDERGROUND UTILITIES

UGU	UTILITY (GENERIC-UNKNOWN)
UT	TELEPHONE
UE	ELECTRIC
UC	CABLE (TV)
UEC	ELECTRIC+CABLE
UET	ELECTRIC+TELEPHONE
UCT	CABLE+TELEPHONE
UECT	ELECTRIC+CABLE+TELEP.
G	GAS LINE
W	WATER LINE
S	SANITARY SEWER (SEPTIC)

ABOVE GROUND UTILITIES (AERIAL)

AGU	UTILITY (GENERIC-UNKNOWN)
T	TELEPHONE
E	ELECTRIC
C	CABLE (TV)
EC	ELECTRIC+CABLE
ET	ELECTRIC+TELEPHONE
AER E&T	ELECTRIC+TELEPHONE
CT	CABLE+TELEPHONE
ECT	ELECTRIC+CABLE+TELEP.
	UTILITY POLE GUY WIRE

PROJECT CONSTRUCTION SYMBOLOGY

PROJECT DESIGN & LAYOUT SYMBOLOGY

CZ	CLEAR ZONE
	PLAN LAYOUT MATCHLINE

PROJECT CONSTRUCTION FEATURES

	TOP OF CUT SLOPE
	TOE OF FILL SLOPE
	STONE FILL
	BOTTOM OF DITCH ℄
	CULVERT PROPOSED
	STRUCTURE SUBSURFACE
PDF	PROJECT DEMARCATION FENCE
BF	BARRIER FENCE
	TREE PROTECTION ZONE (TPZ)
	STRIPING LINE REMOVAL
	SHEET PILES

CONVENTIONAL BOUNDARY SYMBOLOGY

BOUNDARY LINES

TOWN LINE	TOWN BOUNDARY LINE
COUNTY LINE	COUNTY BOUNDARY LINE
STATE LINE	STATE BOUNDARY LINE
	PROPOSED STATE R.O.W. (LIMITED ACCESS)
	PROPOSED STATE R.O.W.
	STATE ROW (LIMITED ACCESS)
	STATE ROW
	TOWN ROW
	PERMANENT EASEMENT LINE (P)
	TEMPORARY EASEMENT LINE (T)
	SURVEY LINE
P/L	PROPERTY LINE (P/L)
SR	SLOPE RIGHTS
6f	6F PROPERTY BOUNDARY
4f	4F PROPERTY BOUNDARY
HAZ	HAZARDOUS WASTE

EPSC LAYOUT PLAN SYMBOLOGY

EPSC MEASURES

	FILTER CURTAIN
	SILT FENCE
	SILT FENCE WOVEN WIRE
	CHECK DAM
	DISTURBED AREAS REQUIRING RE-VEGETATION
	EROSION MATTING

SEE EPSC DETAIL SHEETS FOR ADDITIONAL SYMBOLOGY

ENVIRONMENTAL RESOURCES

	WETLAND BOUNDARY
	RIPARIAN BUFFER ZONE
	WETLAND BUFFER ZONE
	SOIL TYPE BOUNDARY
T&E	THREATENED & ENDANGERED SPECIES
HAZ	HAZARDOUS WASTE AREA
AG	AGRICULTURAL LAND
HABITAT	FISH & WILDLIFE HABITAT
FLOOD PLAIN	FLOOD PLAIN
OHW	ORDINARY HIGH WATER (OHW)
	STORM WATER
	USDA FOREST SERVICE LANDS
	WILDLIFE HABITAT SUIT/CONN

ARCHEOLOGICAL & HISTORIC

ARCH	ARCHEOLOGICAL BOUNDARY
HISTORIC DIST	HISTORIC DISTRICT BOUNDARY
HISTORIC	HISTORIC AREA
H	HISTORIC STRUCTURE

CONVENTIONAL TOPOGRAPHIC SYMBOLOGY

EXISTING FEATURES

	ROAD EDGE PAVEMENT
	ROAD EDGE GRAVEL
	DRIVEWAY EDGE
	DITCH
	FOUNDATION
	FENCE (EXISTING)
	FENCE WOOD POST
	FENCE STEEL POST
	GARDEN
	ROAD GUARDRAIL
	RAILROAD TRACKS
	CULVERT (EXISTING)
	STONE WALL
	WALL
	WOOD LINE
	BRUSH LINE
	HEDGE
	BODY OF WATER EDGE
	LEDGE EXPOSED

PROJECT NAME: WOODSTOCK VILLAGE
PROJECT NUMBER: BF 020-2(43)

FILE NAME: s13j280legend.dgn
PROJECT LEADER: R. YOUNG
DESIGNED BY: VTRANS
SYMBOLOGY LEGEND

PLOT DATE: 11-APR-2017
DRAWN BY: M. LONGSTREET
CHECKED BY: W. LAMMER
SHEET 9 OF 51

GPS CONTROL POINTS

PI #1 B94058

NORTH = 412873.7600
EAST = 1639247.4000
ELEV. = 703.100

GENERAL LOCATION, WOODSTOCK, ABOUT 1 MI (1.6 KM) NORTHEAST OF WOODSTOCK VILLAGE, ABOUT 9.5 MI (15.3 KM) WEST OF WHITE RIVER JUNCTION. TO REACH FROM THE INTERSECTION OF U.S. ROUTE 4 AND VT ROUTE 12 NORTH IN THE CENTER OF WOODSTOCK VILLAGE GO EAST ALONG U.S. ROUTE 4 FOR 1.1 MI (1.8 KM) TO THE INTERSECTION OF A PAVED ENTRANCE DRIVE TO THE CENTRAL VERMONT PUBLIC SERVICE CORPORATION AND THE MARK ON THE LEFT IN A MOWED AREA IN THE NORTHWEST QUADRANT OF THE INTERSECTION. THE MARK IS 5.9 M (19.4 FT) NORTH OF AND ABOUT LEVEL WITH THE NORTH EDGE OF PAVEMENT OF U.S. ROUTE 4, 2.1 M (6.9 FT) NORTHWEST OF THE NORTHWEST EDGE OF PAVEMENT OF THE DRIVE TO CVPS, 4.1 M (13.5 FT) EAST OF THE SOUTHEAST CORNER OF A WOOD CRIB SIGN SUPPORT FOR A CVPS SIGN, AND 4.6 M (15.1 FT) SOUTHWEST OF A FIBERGLASS WITNESS POST AND POLE NO. 9A, SET FLUSH WITH THE GROUND SURFACE IN THE TOP OF A 30-CM DIAMETER CONCRETE MONUMENT POURED TO A DEPTH OF 1.8 M.

PI #2 B94057

NORTH = 411766.6800
EAST = 1638855.0200
ELEV. = 702.350

GENERAL LOCATION, WOODSTOCK VILLAGE, VT. TO REACH FROM THE INTERSECTION OF U.S. ROUTE 4 AND VT ROUTE 12 NORTH IN THE CENTER OF WOODSTOCK VILLAGE GO EAST ALONG U.S. ROUTE 4 FOR 0.8 MI (1.3 KM) TO THE WOODSTOCK NATIONAL BANK AND THE MARK ON THE LEFT IN A MOWED GRASS STRIP BETWEEN U.S. ROUTE 4 AND THE PAVED BANK PARKING LOT, 2.5 M (8.2 FT) NORTHWEST OF AND 0.1 M (0.3 FT) LOWER THAN THE NORTHWEST EDGE OF PAVEMENT OF U.S. ROUTE 4, 1.4 M (4.6 FT) SOUTHEAST OF THE SOUTHEAST EDGE OF THE PAVED BANK PARKING LOT, 35.8 M (117.5 FT) NORTHEAST OF THE EAST CORNER OF THE BANK, 17.4 M (57.1 FT) SOUTH OF A FLAGPOLE, AND 15.8 M (51.8 FT) SOUTHEAST OF A FIBERGLASS WITNESS POST. IT IS SET FLUSH WITH THE GROUND SURFACE IN THE TOP OF A 30-CM DIAMETER CONCRETE MONUMENT POURED TO A DEPTH OF 1.8 M.

TRAVERSE TIES

HVCTRL #7

NORTH = 410272.9936
EAST = 1635964.6351
ELEV. = 697.292

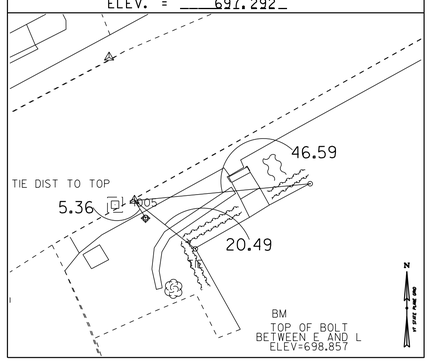

HVCTRL #8

NORTH = 410524.1284
EAST = 1636422.9067
ELEV. = 697.607

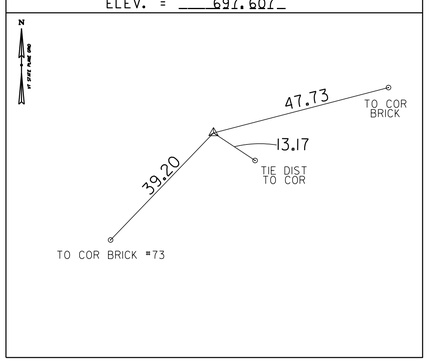

PI #10 B94055

NORTH = 410658.3000
EAST = 1636526.6400
ELEV. = 696.270

TO REACH FROM THE INTERSECTION OF U.S. ROUTE 4 AND VT ROUTE 12 NORTH IN THE CENTER OF WOODSTOCK VILLAGE GO EAST ALONG U.S. ROUTE 4 FOR 0.2 MI (0.3 KM) TO THE MARK ON THE LEFT IN A TRIANGULAR SHAPED PARK BETWEEN U.S. ROUTE 4 AND PLEASANT STREET. THE MARK IS 10.2 M (33.5 FT) NORTH OF AND ABOUT 0.1 M (0.3 FT) HIGHER THAN THE NORTH CURB OF U.S. ROUTE 4 (CENTRAL STREET), 8.9 M (29.2 FT) SOUTH OF THE SOUTH CURB OF PLEASANT STREET, 5.5 M (18.0 FT) EAST OF THE EAST END OF A CANNON BARREL, AND 6.2 M (20.3 FT) WEST OF A FLAGPOLE. IT IS SET FLUSH WITH THE GROUND SURFACE IN THE TOP OF A 30-CM DIAMETER CONCRETE MONUMENT POURED TO A DEPTH OF 1.8 M.

ALIGNMENT TIES

	NORTH	EAST	ELEV.

DATUM	
VERTICAL	NAVD88
HORIZONTAL	NAD83(2011)
ADJUSTMENT	COMPASS

PROJECT NAME: WOODSTOCK VILLAGE
PROJECT NUMBER: BF 020-2(43)

FILE NAME: sl3j280tie.dgn
PROJECT LEADER: R. YOUNG
DESIGNED BY: VTRANS
TIE SHEET

PLOT DATE: 11-APR-2017
DRAWN BY: C. CYR
CHECKED BY: W. LAMMER
SHEET 10 OF 51

PORTLAND CEMENT
CONCRETE SIDEWALK
STA 334+39.0 - 335+35.4 LT
STA 333+88.6 - 335+05.0 RT

VERTICAL GRANITE CURB
STA 334+39.0 - 334+72.0 LT
STA 333+88.6 - 334+28.2 RT
STA 335+06.4 - 335+35.4 LT
STA 334+74.4 - 335+05.0 RT

REHAB, DROP INLET, CATCH
BASIN, OR MANHOLES CLASS I
STA 334+18.74 RT
STA 334+51.56 LT
STA 335+11.68 RT
STA 335+20.01 LT

REMOVE AND REBUILD
STONE RETAINING WALL
STA 334+63.13 RT

SPECIAL PROVISION (REMOVE
AND RESET PATIO BRICK)
STA 335+13.19 - 335+35.42 LT

ITEM 656.85
TREE PROTECTION
STA 334+44.86 LT
STA 335+30.50 LT

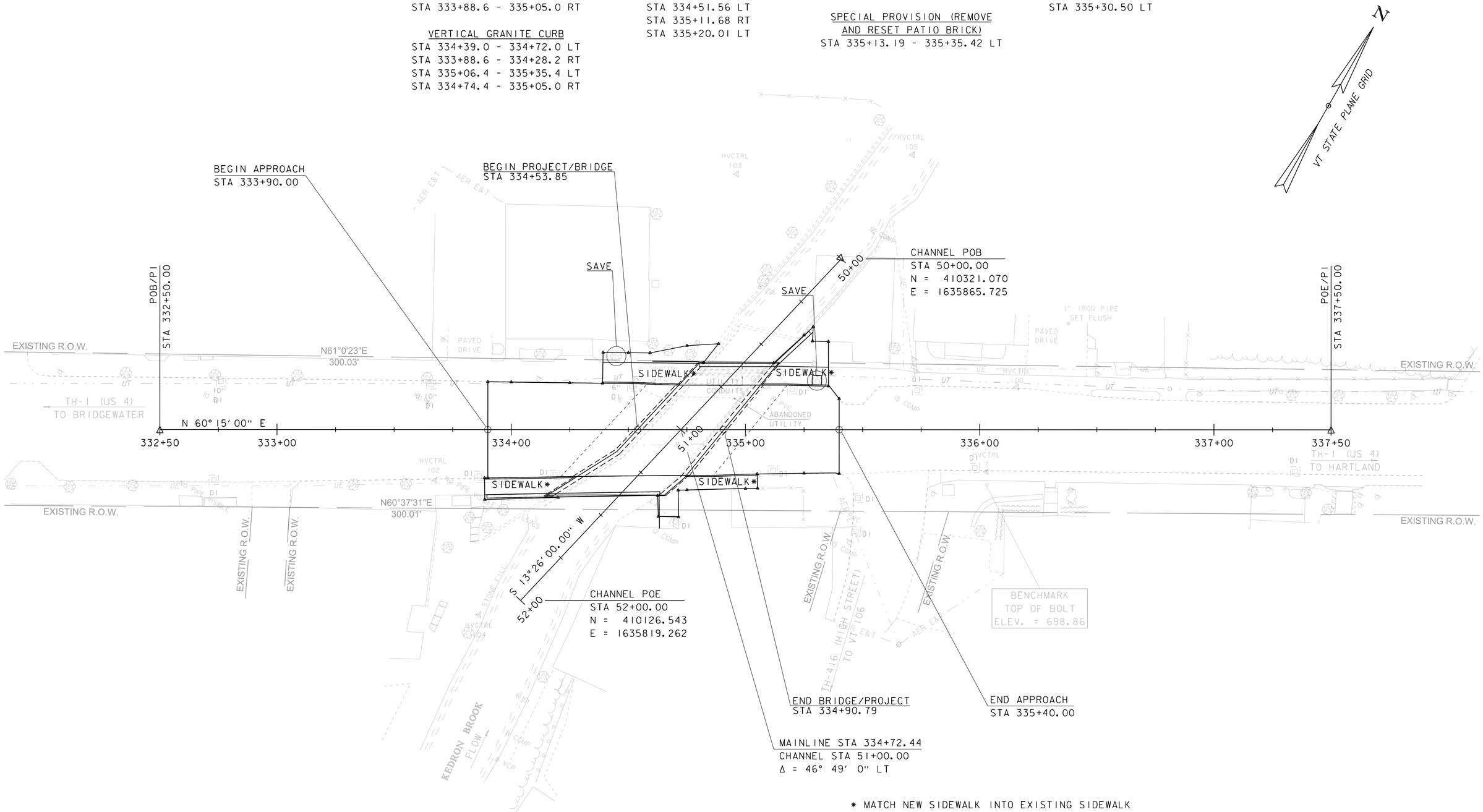

* MATCH NEW SIDEWALK INTO EXISTING SIDEWALK

ADJUST BEGIN AND END APPROACHES IN FIELD TO COINCIDE WITH PORTLAND CONCRETE PAVEMENT JOINT.
ADJUST BEGIN AND END LOCATIONS OF PORTLAND CEMENT CONCRETE SIDEWALKS AND VERTICAL GRANITE CURBS TO COINCIDE WITH JOINT LOCATIONS.

CONCRETE T-BEAM BRIDGE
BUILT 1935
34' SPAN
57' FASCIA TO FASCIA

SCALE 1" = 20'-0"
20 0 20

PROJECT NAME: WOODSTOCK VILLAGE	
PROJECT NUMBER: BF 020-2(43)	
FILE NAME: sl3j280bdr.dgn	PLOT DATE: 11-APR-2017
PROJECT LEADER: R. YOUNG	DRAWN BY: S. COLEY
DESIGNED BY: S. COLEY	CHECKED BY: W. LAMMER
LAYOUT SHEET	SHEET 11 OF 51

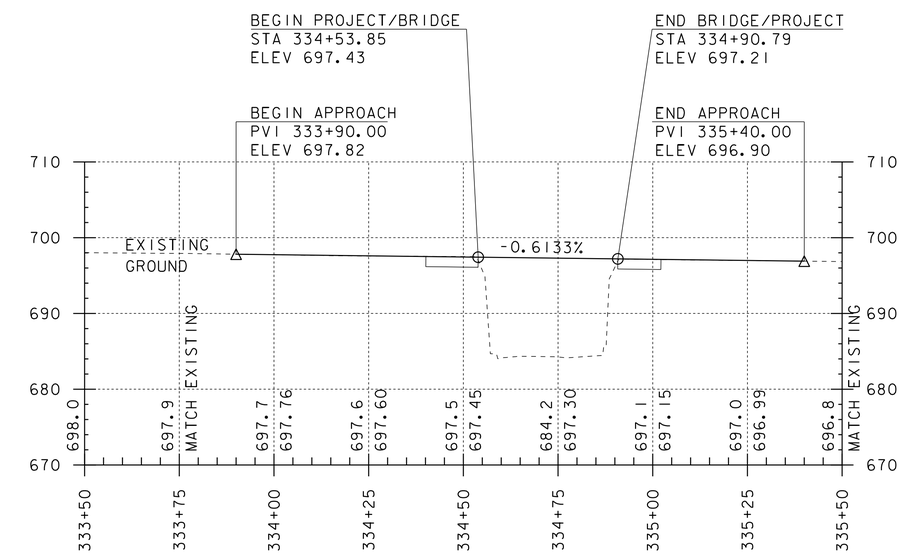

MAINLINE PROFILE

SCALE: HORIZONTAL 1"=20'-0"
VERTICAL 1"=10'-0"

NOTE:
EXISTING ABUTMENTS TO REMAIN UP TO THE MINIMUM DEPTH OF THE NEW BRIDGE SEAT.

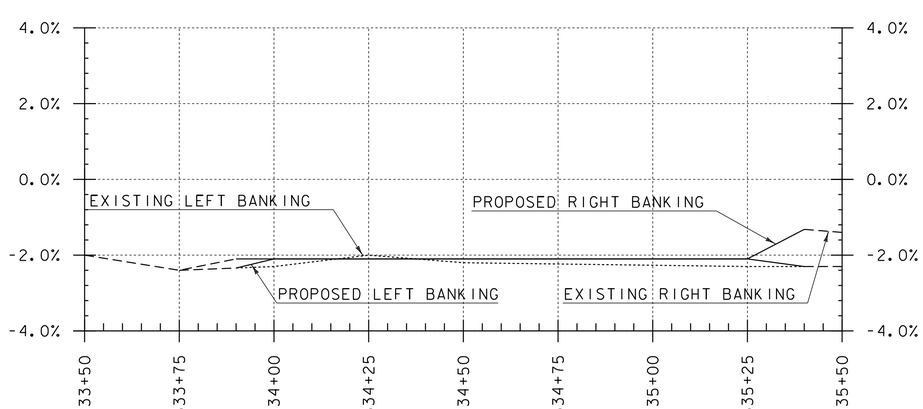

BANKING DIAGRAM

SCALE: HORIZONTAL 1"=20'-0"
VERTICAL 1"=2.0%

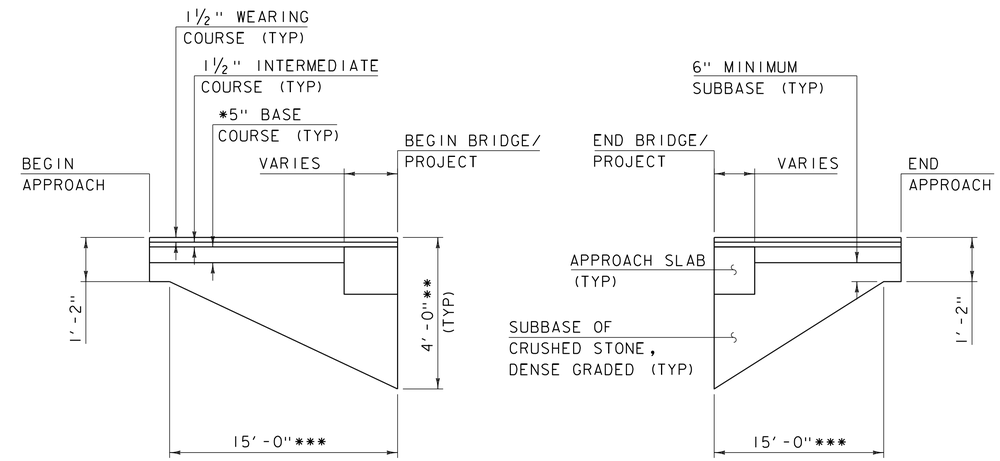

MATERIAL TRANSITION DETAIL

SCALE: HORIZONTAL 1"=20'-0"
VERTICAL 1"=2'-0"

NOTE:
* TWO 2.5 INCH LIFTS OF TYPE IIS BASE
** DEPTH MAY VARY TO ALLOW AT LEAST 1'-0" UNDERCUT BELOW PROPOSED NEW BRIDGE SEAT.
*** DISTANCE PERPENDICULAR TO THE BACK OF THE NEW BRIDGE SEAT

ADJUST BEGIN AND END APPROACHES IN FIELD TO COINCIDE WITH PORTLAND CONCRETE PAVEMENT JOINT.

THE GRADES SHOWN TO THE TENTH ARE THE EXISTING GROUND ELEVATIONS ALONG THE PROPOSED ALIGNMENT.

THE GRADES SHOWN TO THE NEAREST HUNDREDTH ARE THE FINISH GRADES ALONG THE PROPOSED ALIGNMENT.

PROJECT NAME: WOODSTOCK VILLAGE
PROJECT NUMBER: BF 020-2(43)

FILE NAME: s13j280pro.dgn
PROJECT LEADER: R. YOUNG
DESIGNED BY: T. MATTHEWS
MAINLINE PROFILE

PLOT DATE: 11-APR-2017
DRAWN BY: T. MATTHEWS
CHECKED BY: W. LAMMER
SHEET 12 OF 51

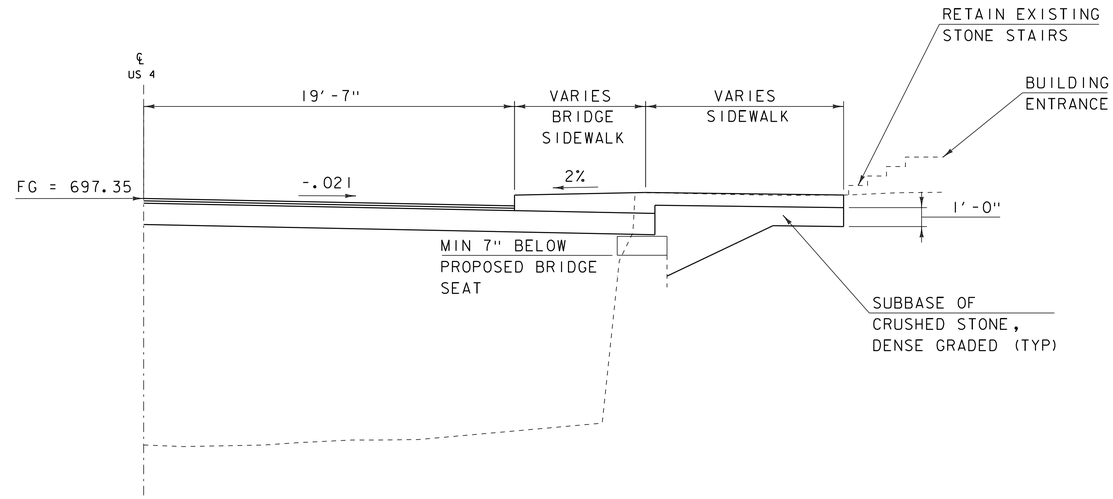

BUILDING ENTRANCE AT STA. 334+66.50 RT

SCALE: 1/4" = 1'-0"

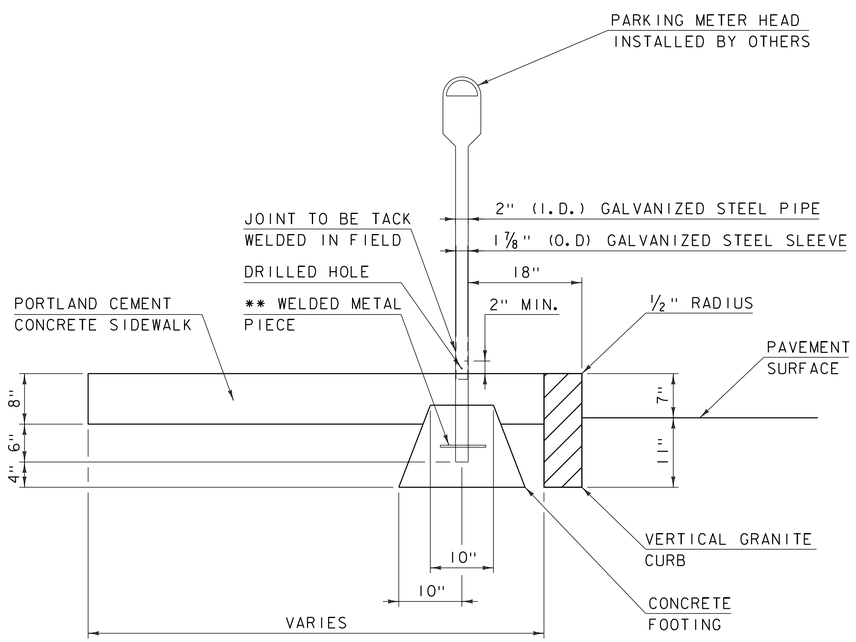

** #4 REBAR MINIMUM 5" LONG,
3-4" ABOVE BOTTOM OF POST

TYPICAL

TYPICAL PARKING METER POST INSTALLATION

SCALE: 1" = 1'-0"

NOTES:

1) SLOPE OF THE SIDEWALK SHALL MATCH THE 2% SLOPE OF THE SIDEWALK ON THE BRIDGE TO A POINT ON A STRAIGHT LINE BETWEEN THE FACE OF THE BRIDGE RAIL AND THE CORNER OF THE BUILDING.
2) SLOPE THE SIDEWALK DOWN TO THE EXISTING ELEVATION AT THE STAIRS FROM THE POINT WHERE THE 2% SLOPE ENDS.
3) PROPOSED SIDEWALK TO END ABOUT 3 INCHES FROM THE EXISTING STAIRS.
4) MINIMUM DEPTH OF THE SUBBASE BELOW THE SIDEWALK IS TO BE 1 FOOT.
5) DEPTH OF MATERIAL REMOVAL SHALL VARY FROM THE REQUIRED DEPTH AT BRIDGE SEAT TO THE MINIMUM DEPTH.
6) THE STONE RETAINING WALL AT STA 334+63.13 SHALL BE REMOVED AND RESET. THE LIMITS WILL BE ONE FOOT BELOW THE PROPOSED BRIDGE SEAT BOTTOM MOVING UP AT AN ANGLE UNTIL IT MEETS THE SIDEWALK THAT IS TO BE LEFT.

PROJECT NAME: WOODSTOCK VILLAGE	
PROJECT NUMBER: BF 020-2(43)	
FILE NAME: sl3j280sidewalk.dgn	PLOT DATE: 11-APR-2017
PROJECT LEADER: R. YOUNG	DRAWN BY: S. COLEY
DESIGNED BY: S. COLEY	CHECKED BY: W. LAMMER
SIDEWALK DETAILS	SHEET 13 OF 51

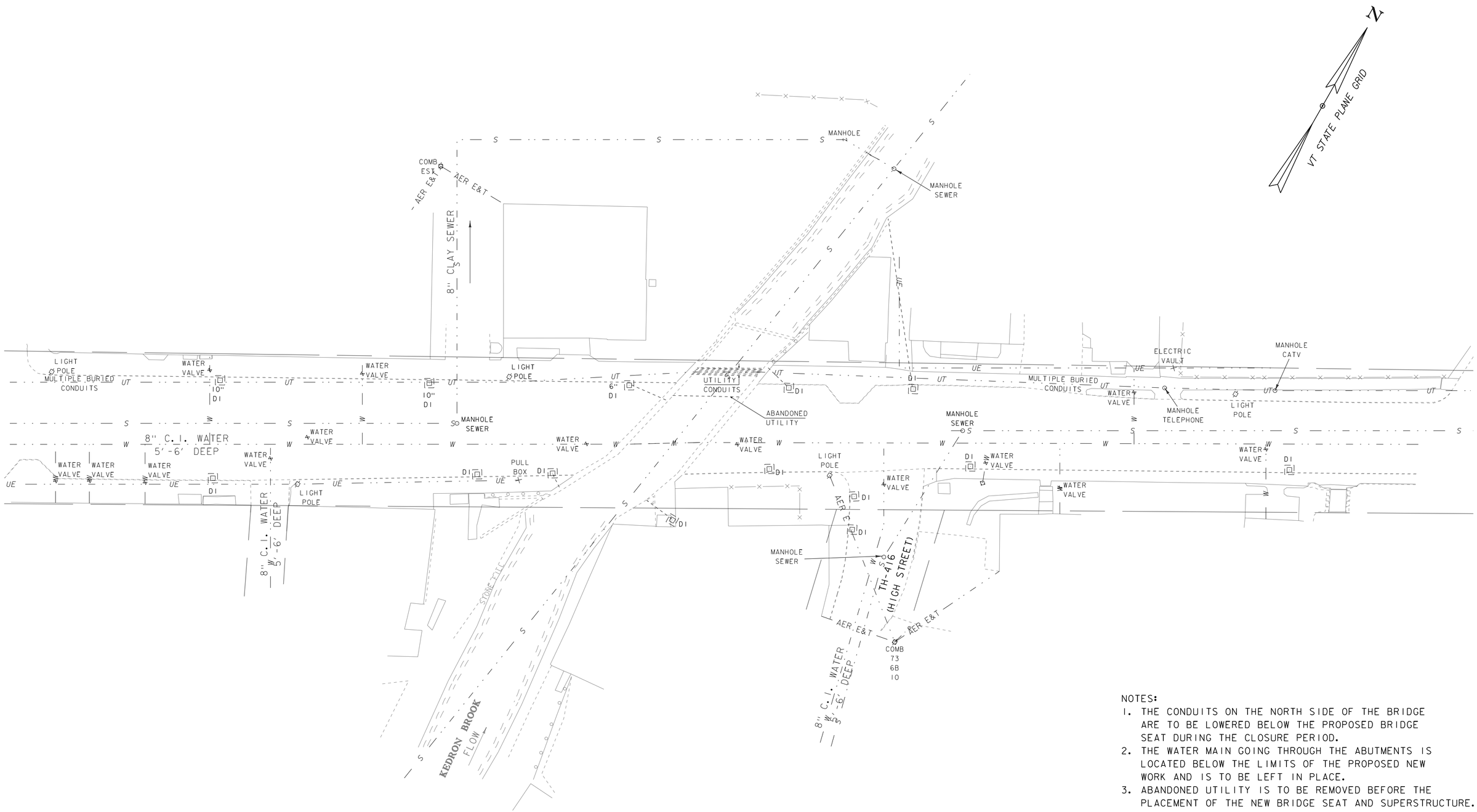

NOTES:

1. THE CONDUITS ON THE NORTH SIDE OF THE BRIDGE ARE TO BE LOWERED BELOW THE PROPOSED BRIDGE SEAT DURING THE CLOSURE PERIOD.
2. THE WATER MAIN GOING THROUGH THE ABUTMENTS IS LOCATED BELOW THE LIMITS OF THE PROPOSED NEW WORK AND IS TO BE LEFT IN PLACE.
3. ABANDONED UTILITY IS TO BE REMOVED BEFORE THE PLACEMENT OF THE NEW BRIDGE SEAT AND SUPERSTRUCTURE.

SCALE 1" = 20'-0"
20 0 20

PROJECT NAME: WOODSTOCK VILLAGE	
PROJECT NUMBER: BF 020-2(43)	
FILE NAME: s13j280bdr_util.dgn	PLOT DATE: 11-APR-2017
PROJECT LEADER: R. YOUNG	DRAWN BY: S. COLEY
DESIGNED BY: S. COLEY	CHECKED BY: W. LAMMER
UTILITY LAYOUT	SHEET 14 OF 51

DURABLE 4 INCH YELLOW LINE (DOUBLE)

STA 333+90 - 335+40 CL

NEW PARKING METER POSTS

333+90 RT
334+32 RT
334+56 LT
334+76 LT
334+78 RT

DURABLE 4 INCH WHITE PAVEMENT MARKINGS, PARKING STALLS

STA 334+11.86 - 334+99.86 LT
STA 333+90.00 - 335+20.00 RT

REMOVE PARKING METER POSTS

334+54.47 LT
333+91.71 RT
334+78.96 LT

DURABLE 8 INCH WHITE PAVEMENT MARKINGS, PAINTED ISLANDS

STA 333+91.63 - 334+11.86 LT
STA 334+99.86 - 335+41.72 LT
STA 335+20.00 - 335+40.00 RT

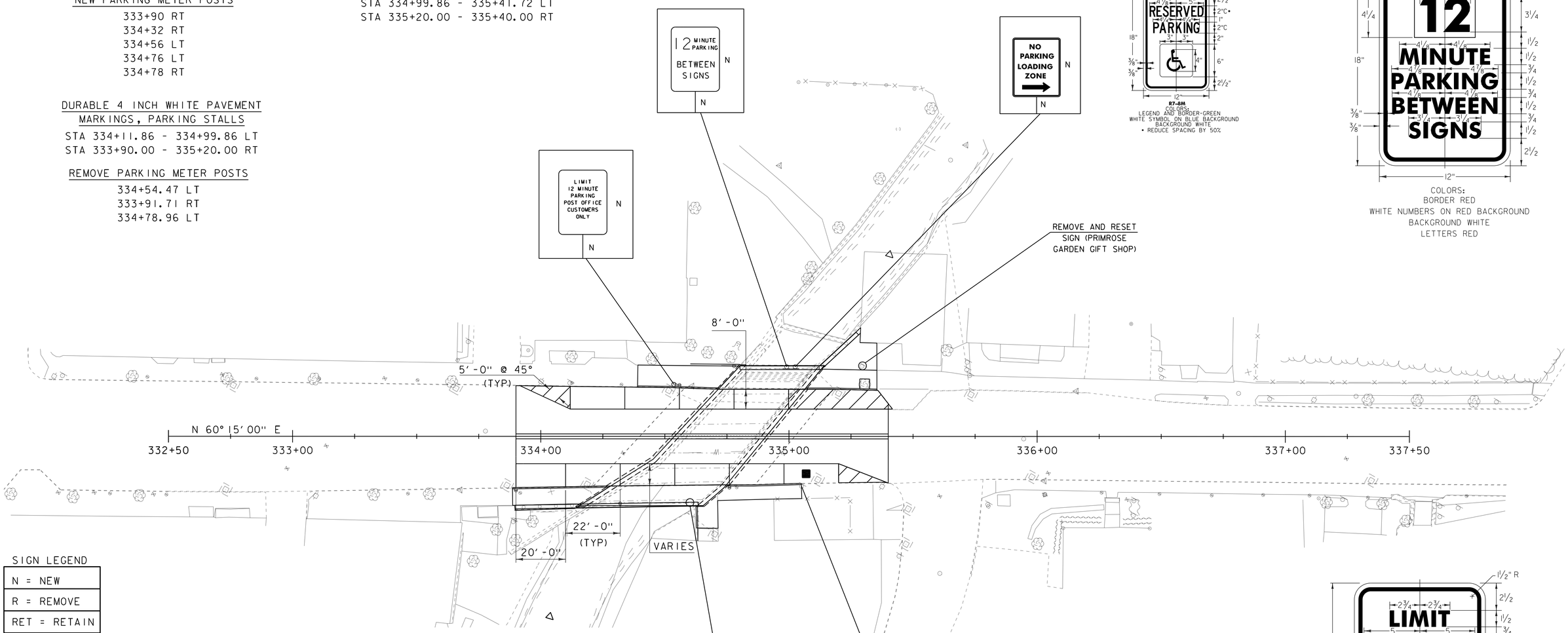

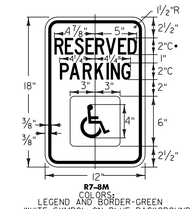

R7-8M
CG-12BCS
LEGEND AND BORDER-GREEN
WHITE SYMBOL ON BLUE BACKGROUND
BACKGROUND WHITE
• REDUCE SPACING BY 50%

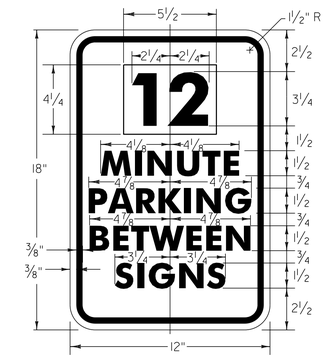

COLORS:
BORDER RED
WHITE NUMBERS ON RED BACKGROUND
BACKGROUND WHITE
LETTERS RED

SIGN LEGEND

N = NEW
R = REMOVE
RET = RETAIN

MILEMARKER, STATION, OR SIGN NUMBER	SIGN LEGEND	SIGN DIMENSIONS WIDTH (in)	SIGN DIMENSIONS HEIGHT (in)	NEW SIGN "A"	EXIST POST RETAIN	EXIST POST SALVAGE	NEW SIGN POSTS NO. OF POSTS	SQUARE STEEL (in) 1.75 (lb/ft 1.88)	2.0 (2.42)	2.5 (3.35)	ANCHOR	SLEEVE	REMARKS	SIGN DETAIL DETAIL ON SHEET NUMBER	STD. SHEET NUMBER
334+53.66 LT	LIMIT 12 MINUTE PARKING POST OFFICE CUSTOMERS ONLY	12	18	1.50			1		12		1		BLACK ON WHITE		
334+99.09 LT	12 MINUTE PARKING BETWEEN SIGNS	12	18	1.50			1		3				RED ON WHITE		
335+02.50 LT	NO PARKING LOADING ZONE	12	18	1.50			1		3				R7-6R		
335+05.09 RT	RESERVED PARKING	12	18	1.50			1		12		1		R7-8		
FINAL POST LENGTHS ARE TO BE DETERMINED IN THE FIELD. POST SIZES ARE COMPUTED BASED ON INFORMATION FURNISHED ON THE STANDARD SHEETS AND THE VTRANS "SIGN POST DESIGN GUIDELINE."									FT 30	FT		EA			
		TOTALS		SF 6.00					FT 30				SHSM = STANDARD HIGHWAY SIGNS AND MARKINGS		

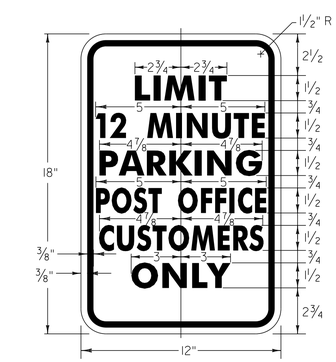

COLORS:
BACKGROUND WHITE

SIGN AND PAVEMENT MARKINGS SHEET

SCALE 1" = 20'-0"
20 0 20

PROJECT NAME: WOODSTOCK VILLAGE	
PROJECT NUMBER: BF 020-2(43)	
FILE NAME: s13j280sgn.dgn	PLOT DATE: 11-APR-2017
PROJECT LEADER: R. YOUNG	DRAWN BY: S. COLEY
DESIGNED BY: S. COLEY	CHECKED BY: W. LAMMER
SIGN AND PAVEMENT MARKINGS SHEET	SHEET 15 OF 51

SPECIAL PROVISION (BRIDGE RAILING, TEXAS COMBINATION RAIL TYPE C412)
333+89.63 - 334+63.45 RT
334+80.25 - 335+28.04 LT

SPECIAL PROVISION (PEDESTRIAN HAND RAILING)
334+63.13 RT
334+60.98 - 334+80.98 LT
335+28.06 - 335+28.66 LT

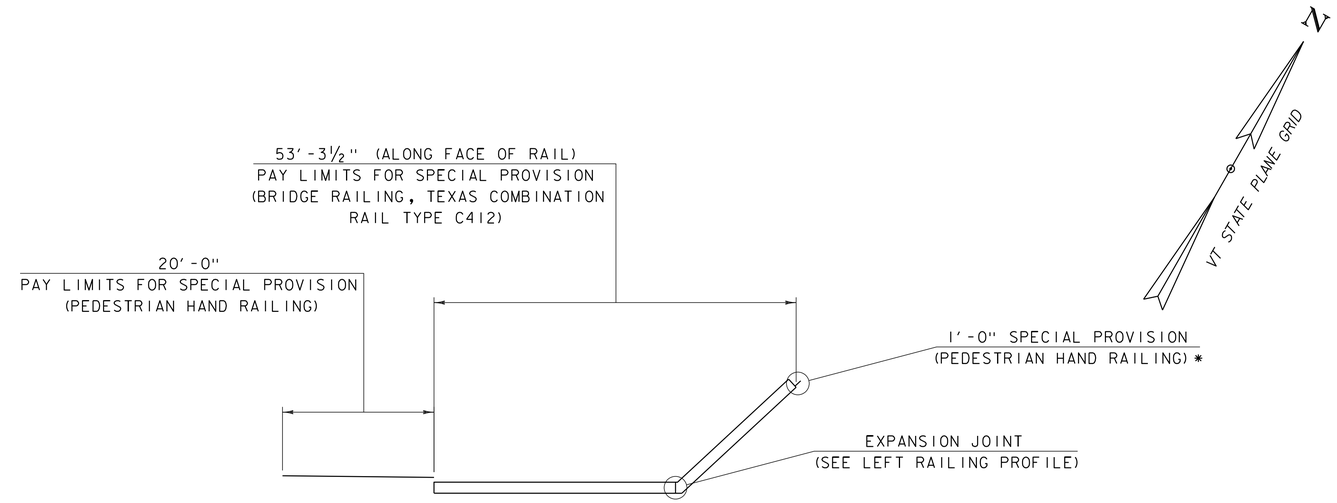

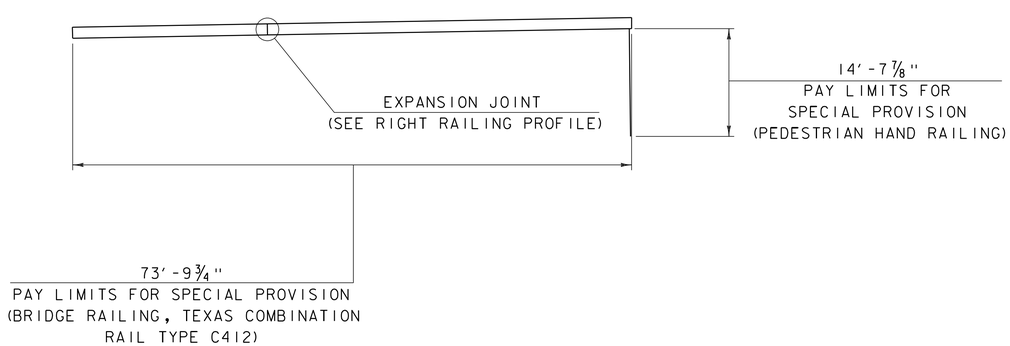

RAIL LAYOUT
SCALE 1" = 10'

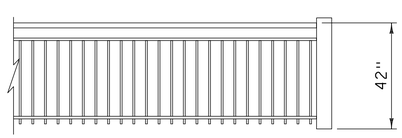

PEDESTRIAN RAIL DETAIL
NTS

NOTE:
* PEDESTRIAN HAND RAILING AT NORTHEAST CORNER SHALL BE ATTACHED TO CONCRETE RAIL IN SUCH A MANNER AS TO BE REMOVABLE BY THE PROPERTY OWNER FOR BUILDING MAINTENANCE.

PROJECT NAME: WOODSTOCK VILLAGE	
PROJECT NUMBER: BF 020-2(43)	
FILE NAME: s13j280rail	PLOT DATE: 11-APR-2017
PROJECT LEADER: R. YOUNG	DRAWN BY: S. COLEY
DESIGNED BY: S. COLEY	CHECKED BY: W. LAMMER
RAIL LAYOUT	SHEET 16 OF 51

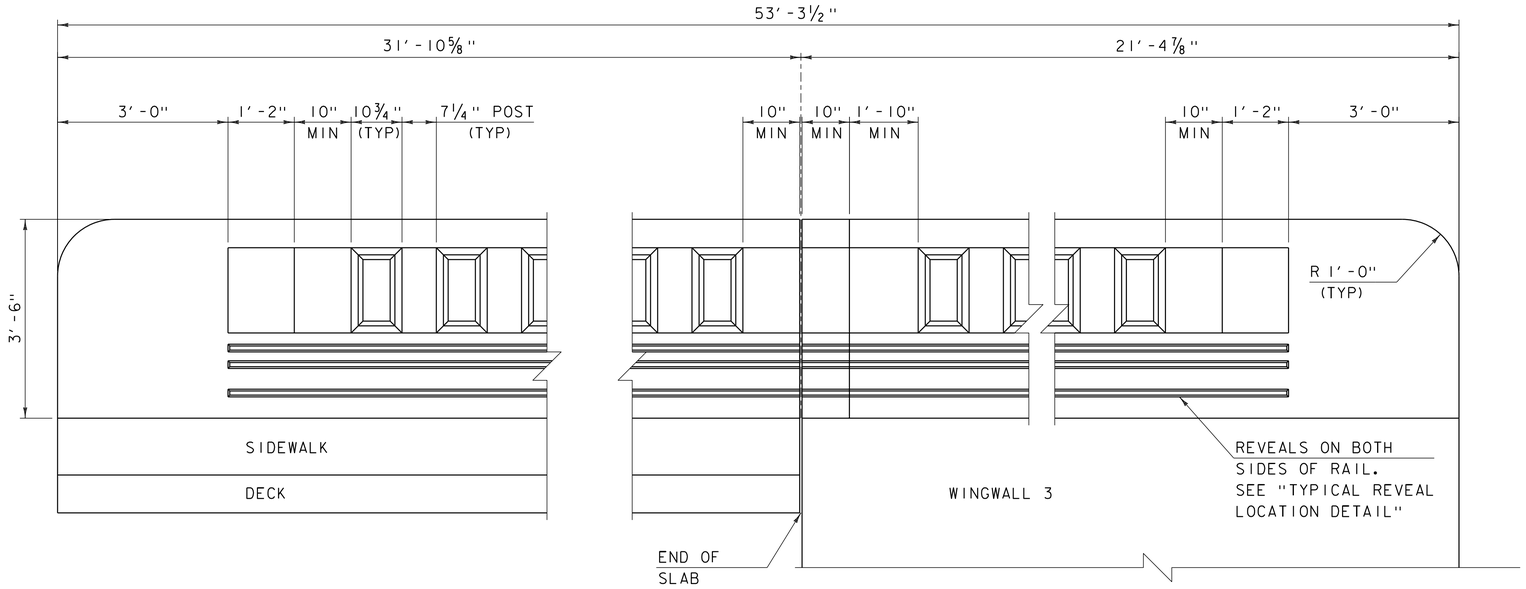

LEFT BRIDGE RAILING ELEVATION

SCALE ¾" = 1'-0"

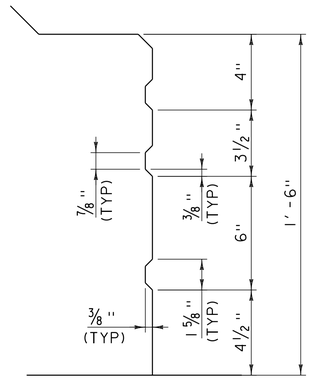

TYPICAL REVEAL LOCATION DETAIL

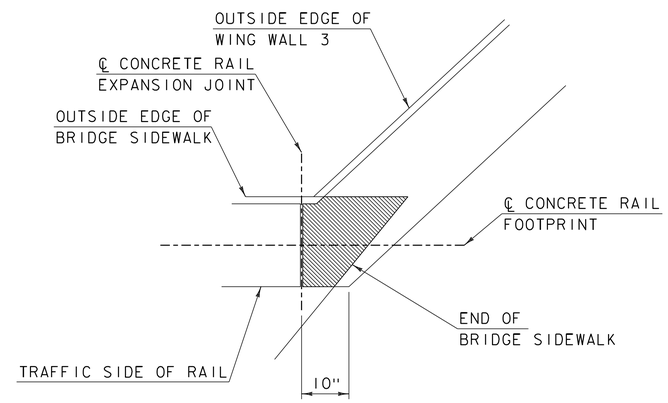

LEFT BRIDGE RAIL EXPANSION DETAIL

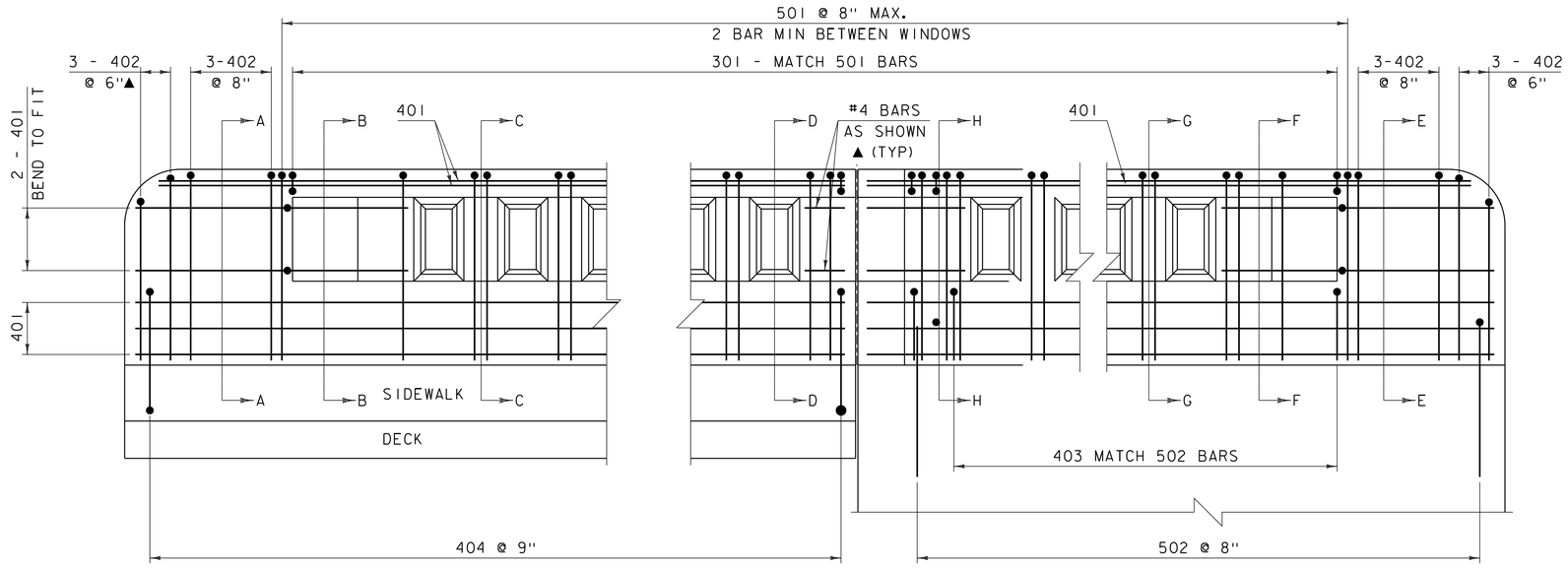

LEFT BRIDGE RAILING REINFORCEMENT

NOTES:

1. HATCHED AREA MUST HAVE ½" CORK MATERIAL UNDER CONCRETE RAIL AS SHOWN.
2. THE GAP IN THE RAIL AT THE EXPANSION JOINT IS ½" WIDE.
3. LOCATION OF THE RAIL EXPANSION JOINT MUST BE AT 10" FROM THE CORNER OF THE RAIL ON THE SIDEWALK SIDE AND BE PERPENDICULAR TO THE RAIL.

NOTE:

NF = NEAR FACE
FF = FAR FACE
EF = EACH FACE
▲ = CUT TO FIT IN FIELD
1¾" CLEAR, UNLESS OTHERWISE SPECIFIED ON THE PLANS.
ALL CHAMFERS ARE ¾" UNLESS OTHERWISE SPECIFIED ON THE PLANS.

PROJECT NAME: WOODSTOCK VILLAGE	
PROJECT NUMBER: BF 020-2(43)	
FILE NAME: 13j280/s13j280rail.dgn	PLOT DATE: 11-APR-2017
PROJECT LEADER: R.YOUNG	DRAWN BY: D.D.BEARD
DESIGNED BY: W.LAMMER	CHECKED BY: W.LAMMER
LEFT RAILING PROFILE	SHEET 17 OF 51

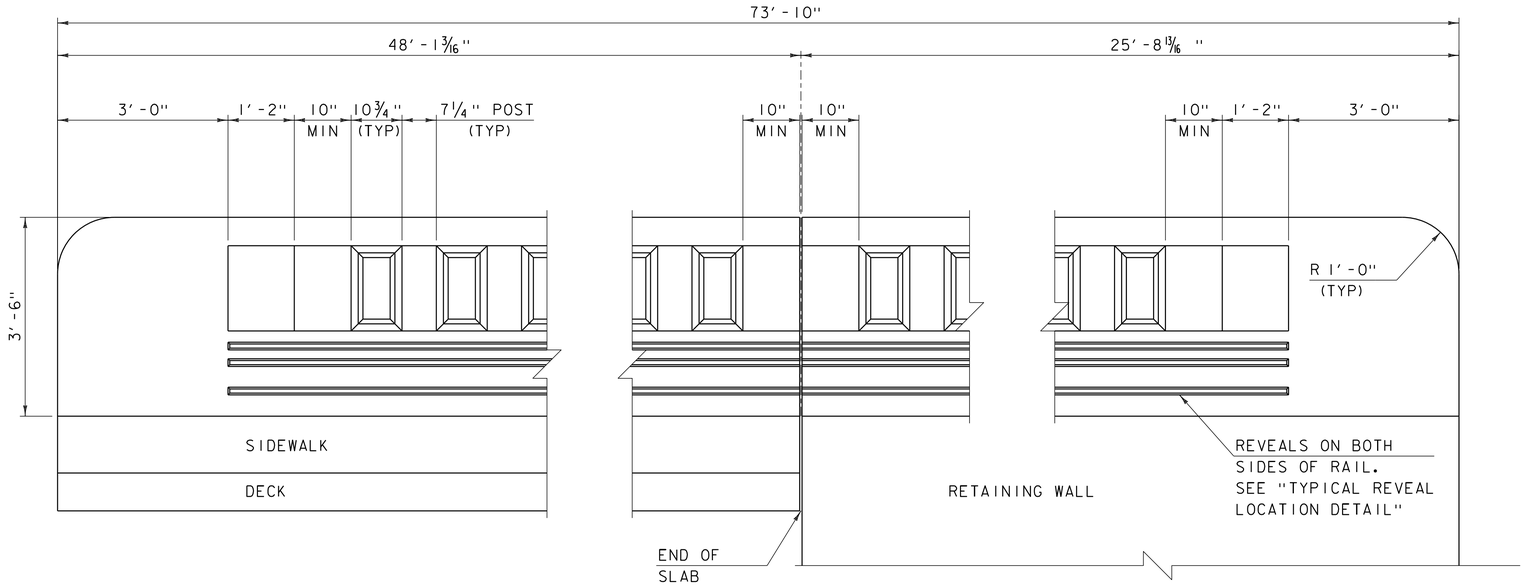

RIGHT BRIDGE RAILING ELEVATION

SCALE 3/4" = 1'-0"

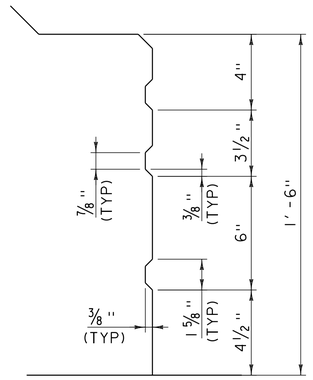

TYPICAL REVEAL LOCATION DETAIL

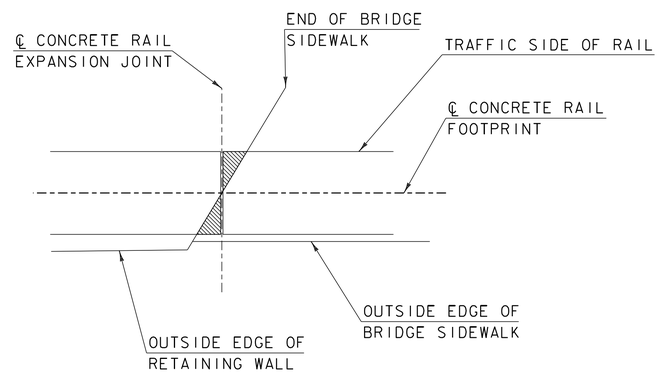

RIGHT BRIDGE RAIL EXPANSION DETAIL

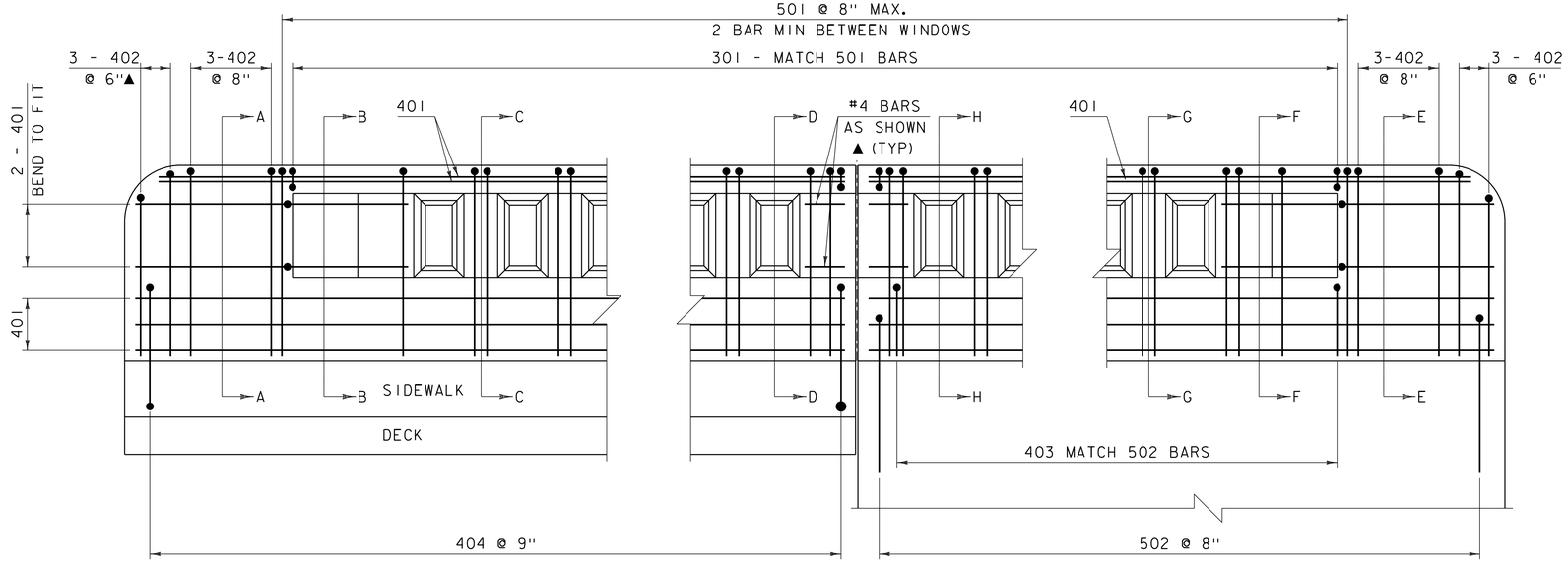

RIGHT BRIDGE RAILING REINFORCEMENT

NOTES:

1. HATCHED AREA MUST HAVE 1/2" CORK MATERIAL UNDER CONCRETE RAIL AS SHOWN.
2. THE GAP IN THE RAIL AT THE EXPANSION JOINT IS 1/2" WIDE.
3. LOCATION OF THE RAIL EXPANSION JOINT MUST BE AT THE INTERSECTION OF THE END OF BRIDGE SIDEWALK, CENTERLINE RAIL FOOTPRINT AND PERPENDICULAR TO THE RAIL.

NOTE:

NF = NEAR FACE
FF = FAR FACE
EF = EACH FACE
▲ = CUT TO FIT IN FIELD
1 3/4" CLEAR, UNLESS OTHERWISE SPECIFIED ON THE PLANS.
ALL CHAMFERS ARE 3/4" UNLESS OTHERWISE SPECIFIED ON THE PLANS.

PROJECT NAME: WOODSTOCK VILLAGE	
PROJECT NUMBER: BF 020-2(43)	
FILE NAME: 13j280/s13j280rail.dgn	PLOT DATE: 11-APR-2017
PROJECT LEADER: R.YOUNG	DRAWN BY: D.D.BEARD
DESIGNED BY: W.LAMMER	CHECKED BY: W.LAMMER
RIGHT RAILING PROFILE	SHEET 18 OF 51

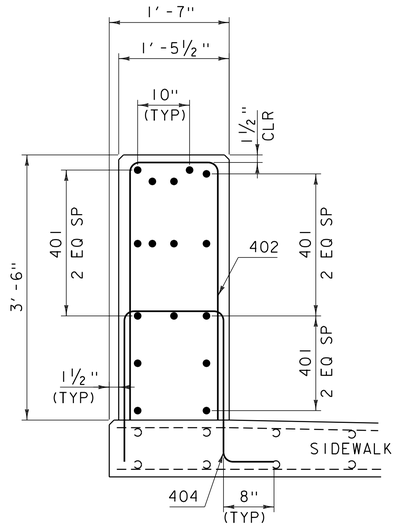

SECTION A-A

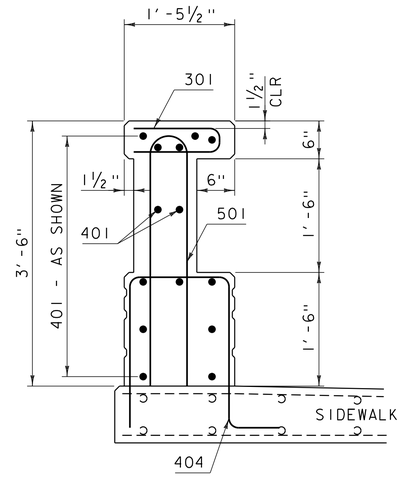

SECTION B-B

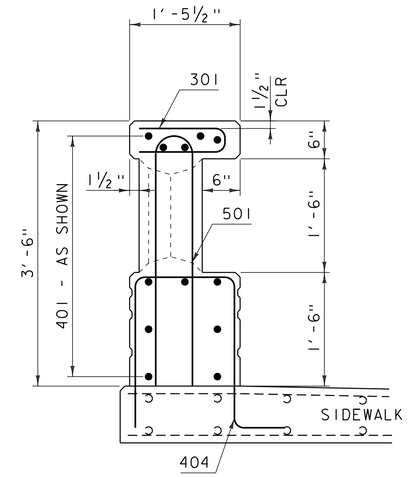

SECTION C-C

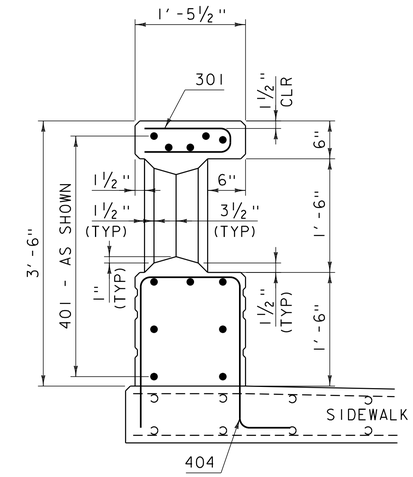

SECTION D-D

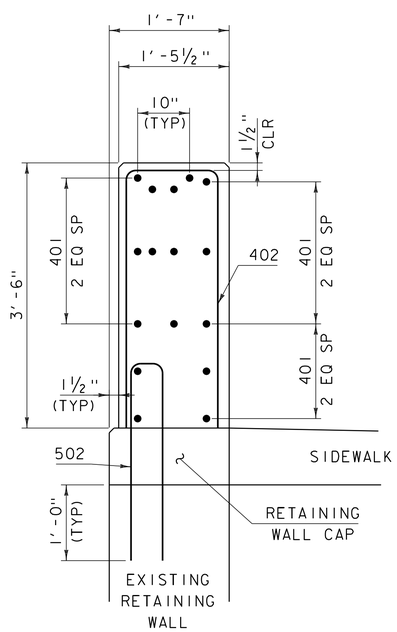

SECTION E-E

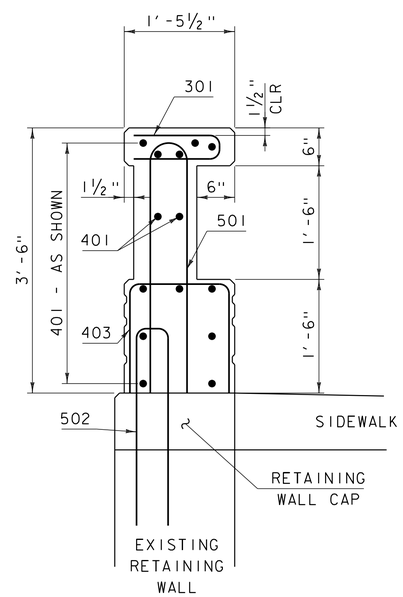

SECTION F-F

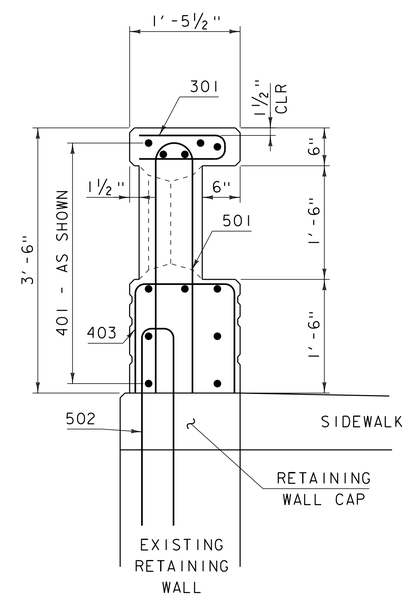

SECTION G-G

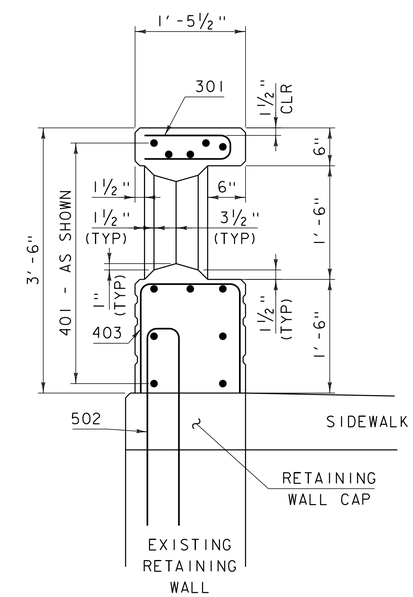

SECTION H-H

NOTE:

NF = NEAR FACE
FF = FAR FACE
EF = EACH FACE
▲ = CUT TO FIT IN FIELD
1¾" CLEAR, UNLESS OTHERWISE SPECIFIED ON THE PLANS.
2'-2" BAR LAP UNLESS OTHERWISE SPECIFIED ON THE PLANS.
ALL CHAMFERS ARE ¾"

PROJECT NAME: WOODSTOCK VILLAGE	
PROJECT NUMBER: BF 020-2(43)	
FILE NAME: 13j280/sl3j280rail.dgn	PLOT DATE: 11-APR-2017
PROJECT LEADER: R.YOUNG	DRAWN BY: D.D.BEARD
DESIGNED BY: W.LAMMER	CHECKED BY: W.LAMMER
RAILING SECTIONS	SHEET 19 OF 51

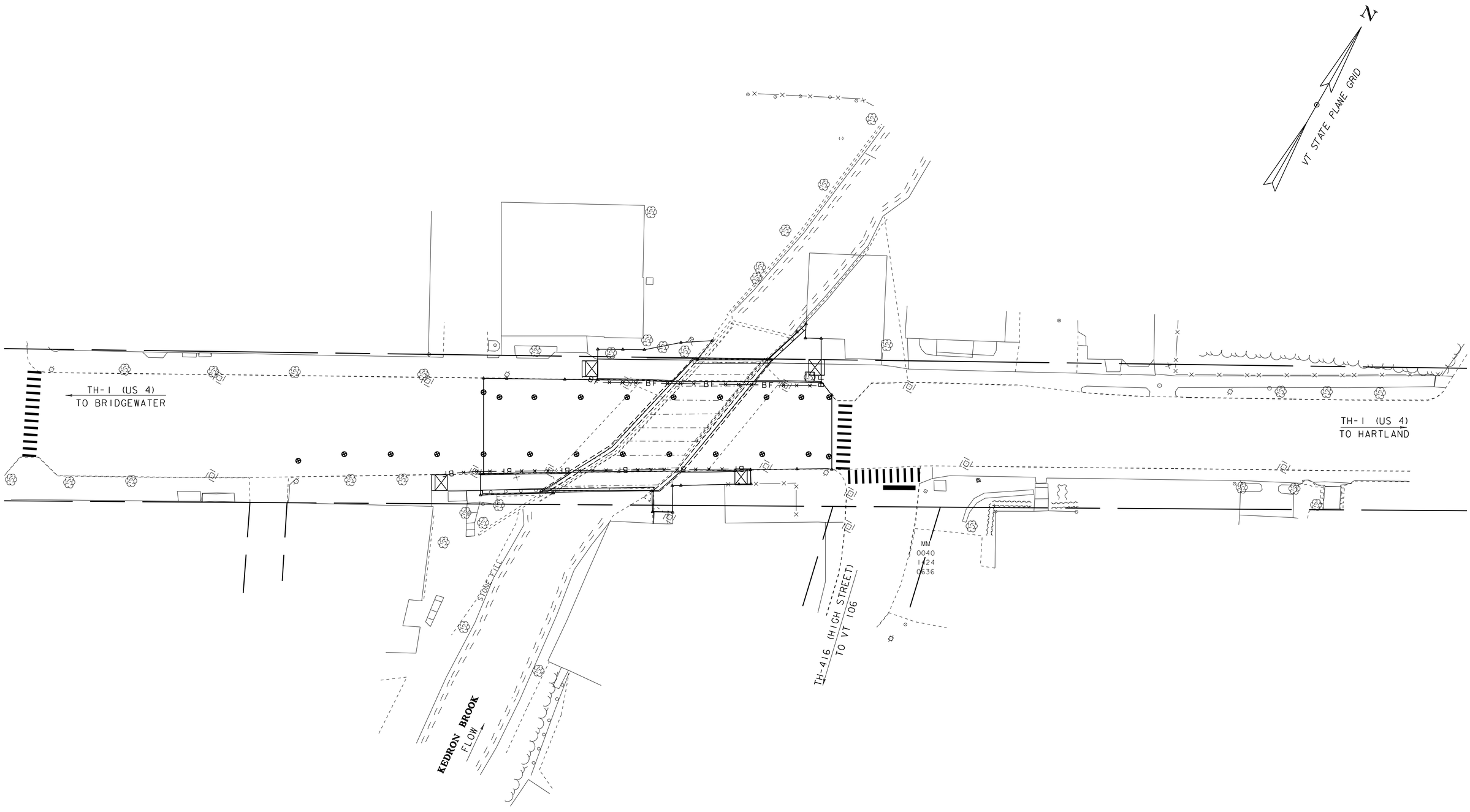

SCALE 1" = 20'-0"
20 0 20

PROJECT NAME: WOODSTOCK VILLAGE	
PROJECT NUMBER: BF 020-2(43)	
FILE NAME: s13j280trafficcontrol.dgn	PLOT DATE: 11-APR-2017
PROJECT LEADER: R. YOUNG	DRAWN BY: D.D.BEARD
DESIGNED BY: S. COLEY	CHECKED BY: W. LAMMER
PEDESTRIAN TRAFFIC CONTROL LAYOUT SHEET	SHEET 20 OF 51

These "No Parking Anytime" signs will not be installed, as per April 12, 2017 email from the Village.

Contractor parking will be discussed w/ Village.

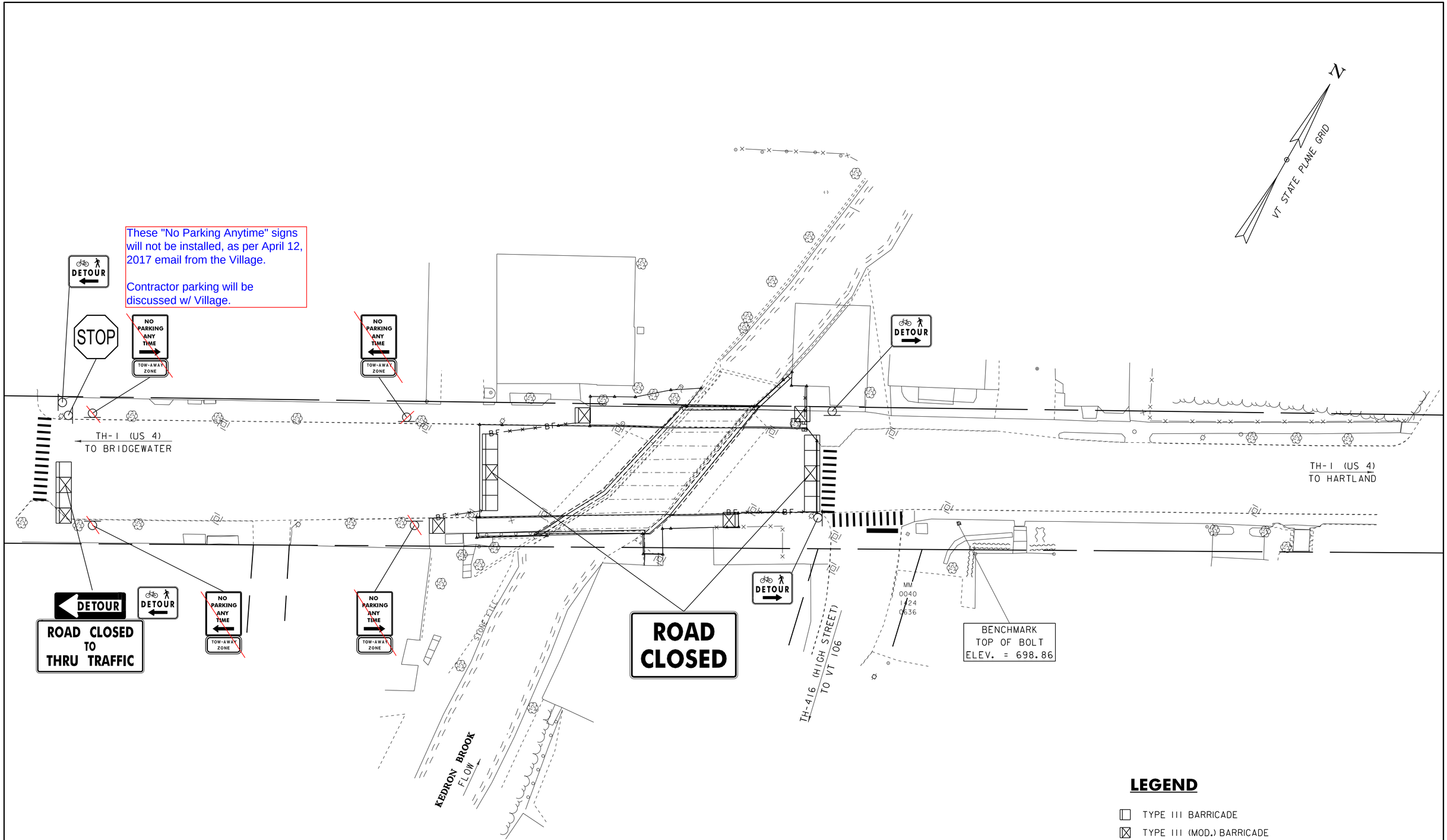

LEGEND

- TYPE III BARRICADE
- TYPE III (MOD.) BARRICADE

CONCRETE T-BEAM BRIDGE
BUILT 1935
34' SPAN
57' FASCIA TO FASCIA

SCALE 1" = 20'-0"
20 0 20

PROJECT NAME: WOODSTOCK VILLAGE	
PROJECT NUMBER: BF 020-2(43)	
FILE NAME: s13j280trafficcontrol.dgn	PLOT DATE: 11-APR-2017
PROJECT LEADER: R. YOUNG	DRAWN BY: D.D.BEARD
DESIGNED BY: S. COLEY	CHECKED BY: W. LAMMER
PHASE 1 TRAFFIC CONTROL LAYOUT SHEET	SHEET 21 OF 51

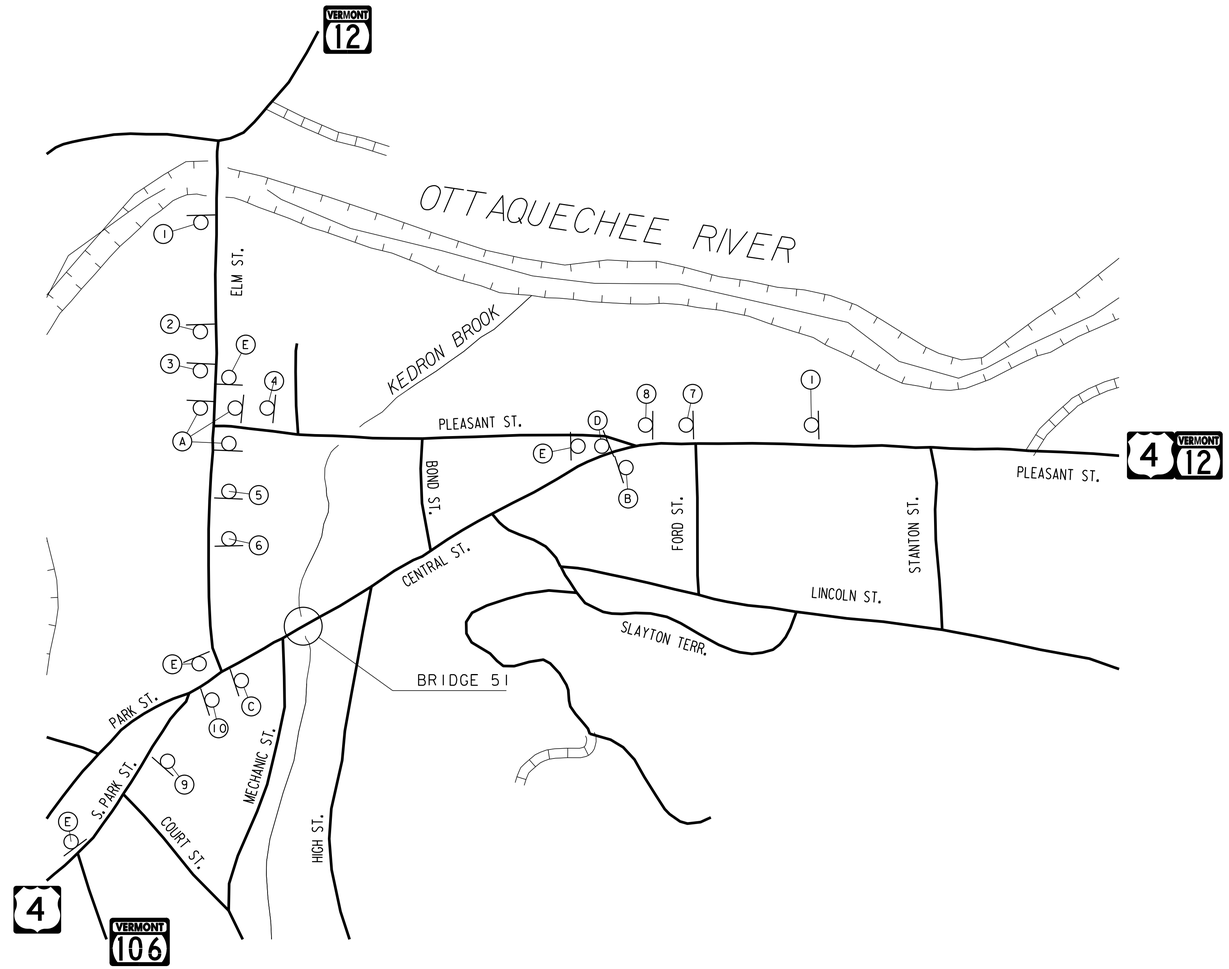

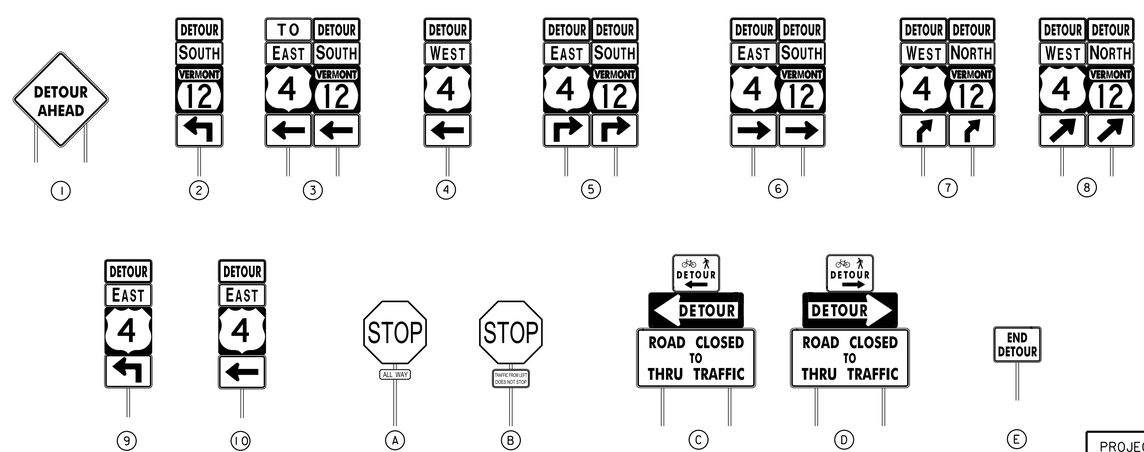

PROJECT NAME:	WOODSTOCK VILLAGE
PROJECT NUMBER:	BF 020-2(43)

FILE NAME: 13j280/s13j280detour.dgn	PLOT DATE: 11-APR-2017
PROJECT LEADER: R.YOUNG	DRAWN BY: D.D.BEARD
DESIGNED BY: W.LAMMER	CHECKED BY: W.LAMMER
LOCAL DETOUR	SHEET 22 OF 51

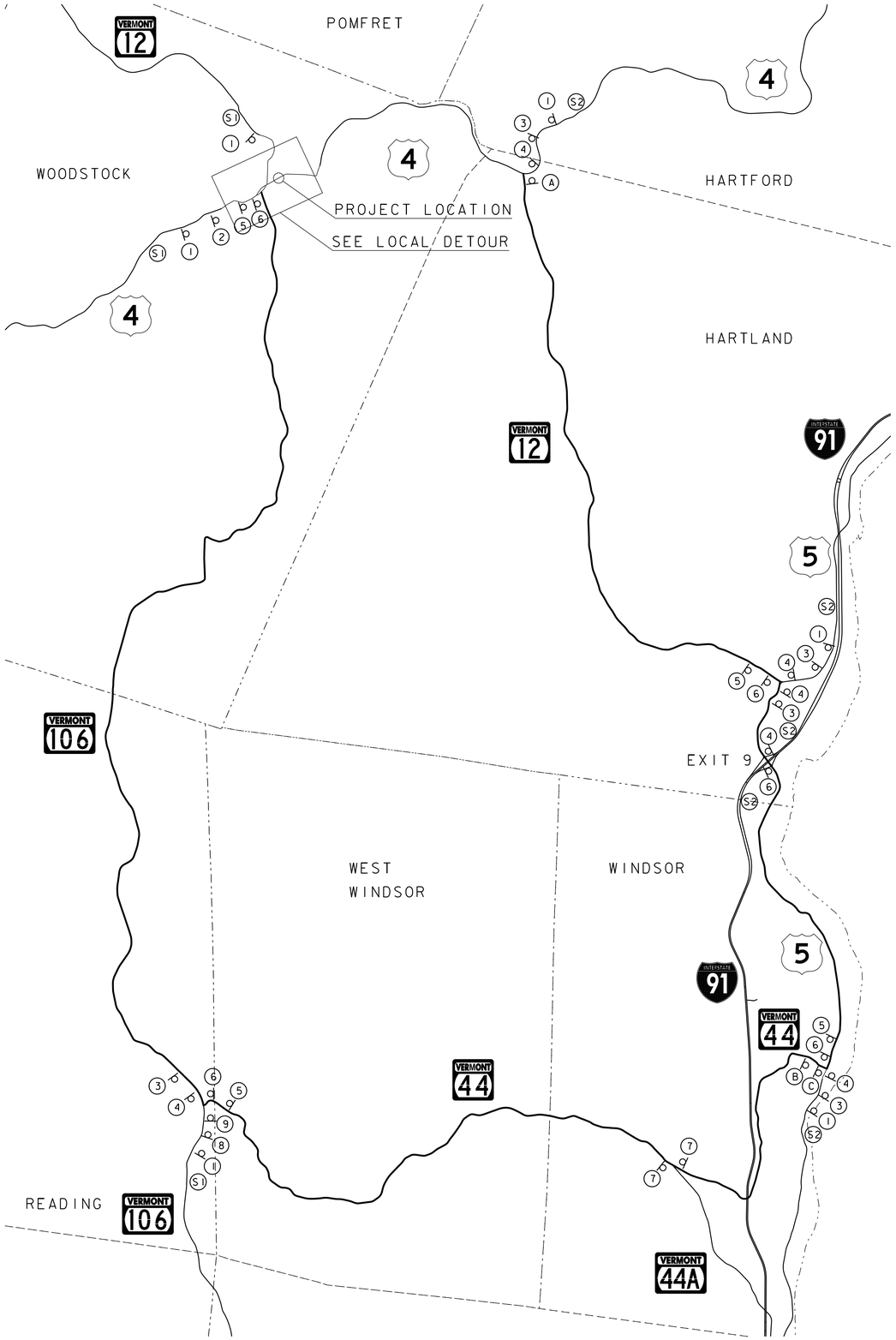

U	S		4		E	
V	T		1	2		S
C	L	O	S	E	D	

PORTABLE CHANGEABLE SIGN–S1–PHASE 1

U	S		4		W	
V	T		1	2		N
C	L	O	S	E	D	

PORTABLE CHANGEABLE SIGN–S2–PHASE 1

	W	O	O	D	–	
	S	T	O	C	K	
V	I	L	L	A	G	E

PORTABLE CHANGEABLE SIGN–S1–PHASE 2

	W	O	O	D	–	
	S	T	O	C	K	
V	I	L	L	A	G	E

PORTABLE CHANGEABLE SIGN–S2–PHASE 2

*	M	M	M	M	D	D	–
*	M	M	M	M	D	D	

PORTABLE CHANGEABLE SIGN–S1–PHASE 3A

*	M	M	M	M	D	D	–
*	M	M	M	M	D	D	

PORTABLE CHANGEABLE SIGN–S2–PHASE 3A

T	R	U	C	K	S	
D	E	T	O	U	R	
V	T		1	0	6	S

PORTABLE CHANGEABLE SIGN–S1–PHASE 3B

T	R	U	C	K	S	
D	E	T	O	U	R	
V	T		1	2		S

PORTABLE CHANGEABLE SIGN–S2–PHASE 3B

* M = MONTH
D = DAY

** US 4: EAST / WEST
VT 12: SOUTH / NORTH

NOTES:

1. THE PORTABLE CHANGEABLE MESSAGE SIGNS SHALL BE FULLY OPERATIONAL A MINIMUM OF TWO WEEKS PRIOR TO THE CLOSURE OF THE BRIDGE.
2. DURING ACTUAL CLOSURE SWITCH FROM PHASE 3A TO PHASE 3B.
3. DETOUR SIGNS SHALL BE LOCATED ADJACENT TO EXISTING INTERSECTION ROUTE MARKER ASSEMBLIES WHERE APPLICABLE
4. CONFIRMATION ROUTE MARKERS (SIGN 7) SHALL BE INSTALLED IMMEDIATELY FOLLOWING EACH TURN AND AT ALL LOCATIONS ALONG DETOUR WHERE ROUTE MARKERS EXIST FOR THE PARENT ROUTE.
5. DETOUR SIGNING IS THE RESPONSIBILITY OF THE CONTRACTOR. PAYMENT FOR ALL TEMPORARY TRAFFIC CONTROL DEVICES FOR IMPLEMENTING THE DETOUR, INCLUDING BUT NOT LIMITED TO SIGNS AND BARRICADES WILL BE INCLUDED IN THE UNIT PRICE BID FOR CONTRACT ITEM 900.645 SPECIAL PROVISION (TRAFFIC CONTROL, ALL-INCLUSIVE). MESSAGE BOARDS, FLAGGERS, AND UNIFORMED TRAFFIC OFFICERS WILL BE PAID FOR SEPARATELY.
6. THE DETOUR PLAN IS A CONCEPTUAL OUTLINE ONLY AND THE CONTRACTOR SHALL SUBMIT A DETAILED PLAN OF EACH INTERSECTION SHOWING DETOUR SIGN LOCATIONS IN RELATION TO EXISTING SIGNS.

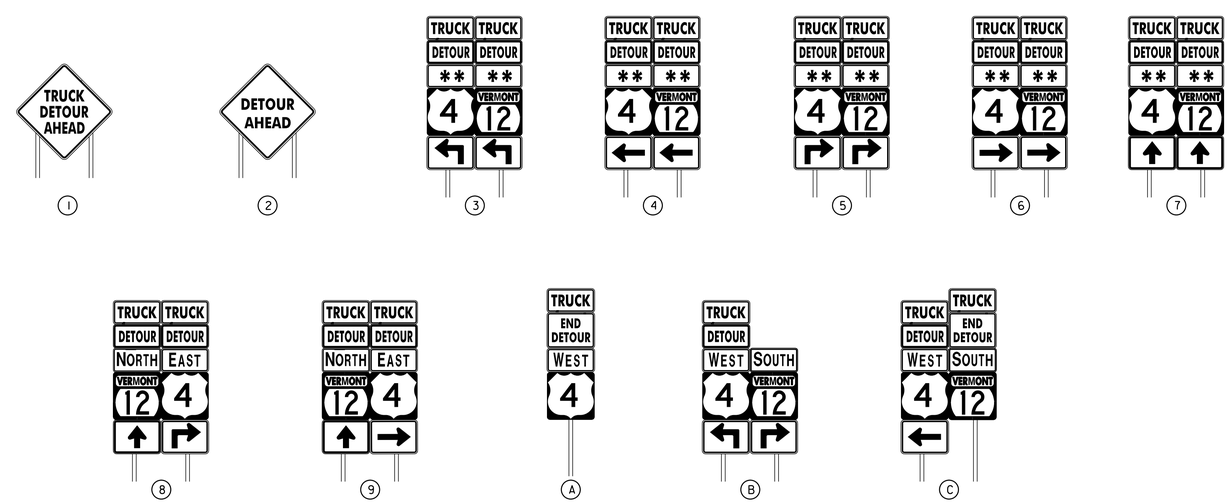

PROJECT NAME: WOODSTOCK VILLAGE	
PROJECT NUMBER: BF 020-2(43)	
FILE NAME: s13j280detour.dgn	PLOT DATE: 11-APR-2017
PROJECT LEADER: R. YOUNG	DRAWN BY: D.D.BEARD
DESIGNED BY: W.LAMMER	CHECKED BY: W.LAMMER
REGIONAL TRUCK DETOUR	SHEET 23 OF 51

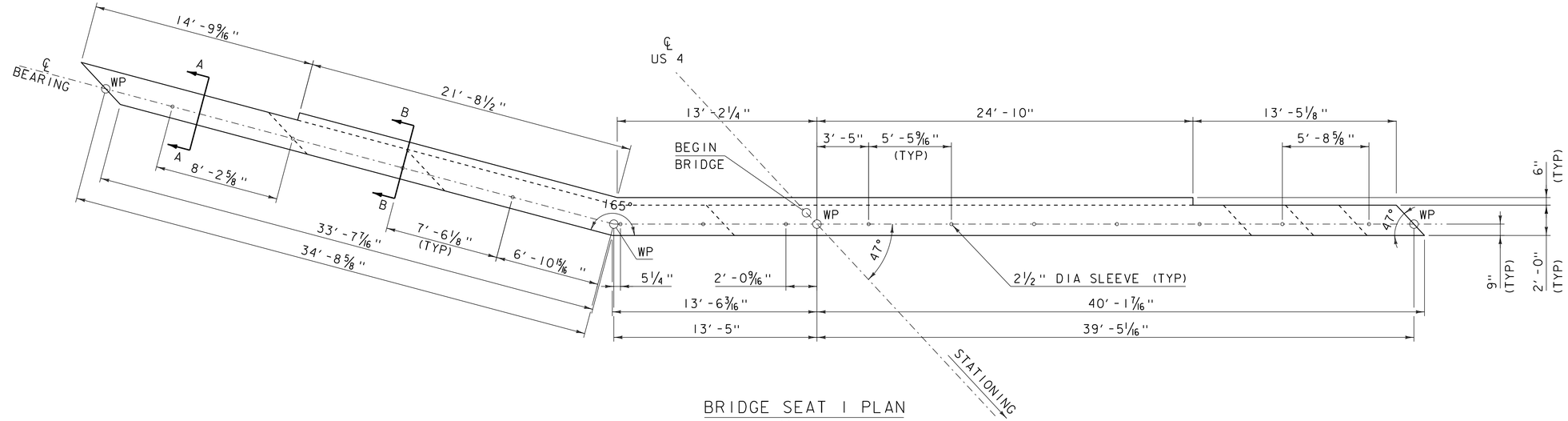

BRIDGE SEAT 1 PLAN

SCALE 1/4" = 1'-0"

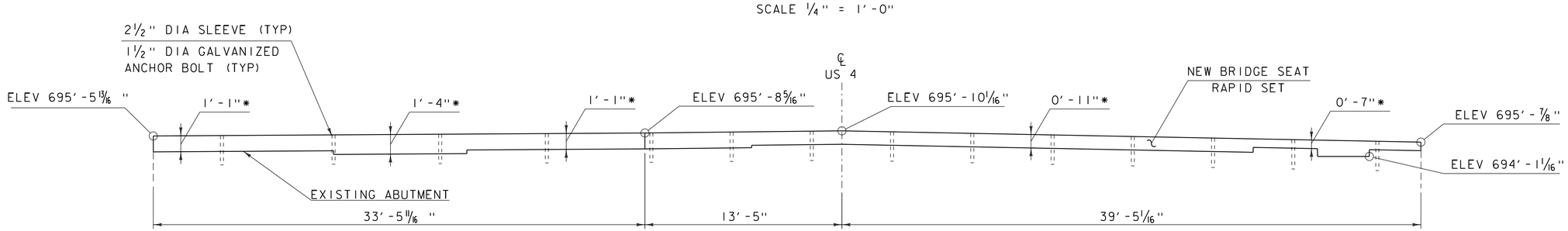

BRIDGE SEAT 1 ELEVATION ALONG CL BEARING

SCALE 1/4" = 1'-0"

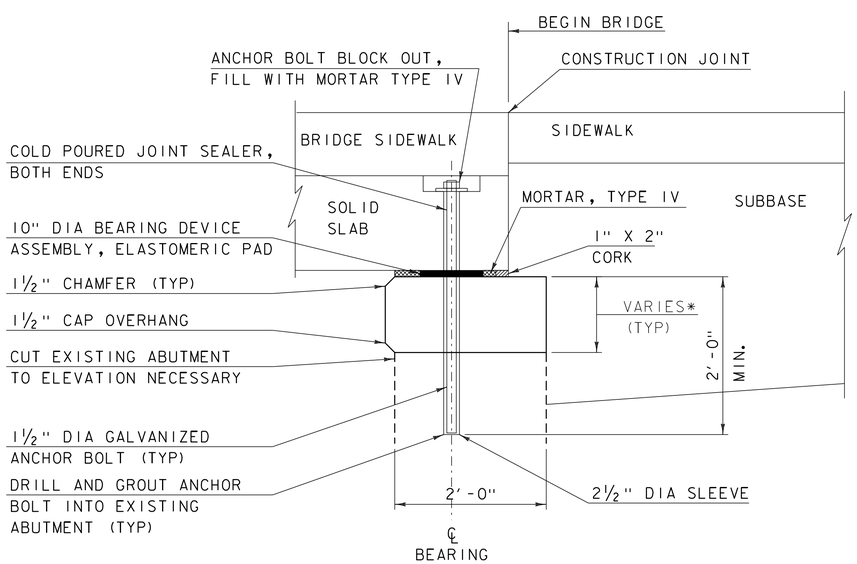

BRIDGE SEAT TYPICAL SECTION A-A***

NORMAL TO CL BEARING

SCALE 1" = 1'-0"

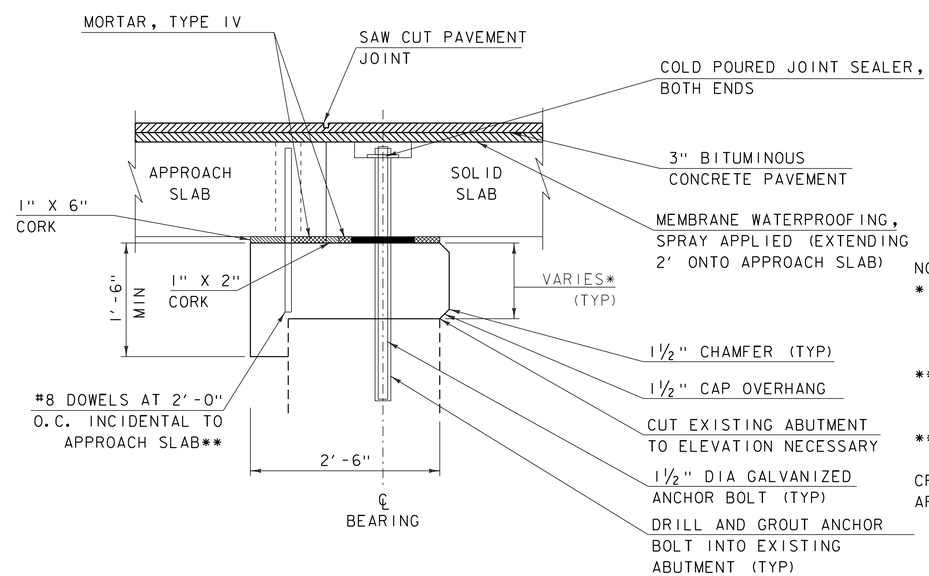

BRIDGE SEAT TYPICAL SECTION B-B***

NORMAL TO CL BEARING

SCALE 1" = 1'-0"

NOTES:

* CUT EXISTING ABUTMENT AS REQUIRED TO MEET THE MINIMUM THICKNESS REQUIREMENT OF 0'-6" FOR THE NEW BRIDGE SEAT. DEPTH OF BRIDGE SEAT VARIES BASED ON EXISTING BRIDGE SEAT ELEVATION

** FILL WITH MORTAR, TYPE IV (ALLOW TO FLOW UNDER APPROACH SLAB). DOWEL END IN APPROACH SLAB WRAPPED IN PIPE INSULATION.

*** BRIDGE SEAT 1 SECTIONS SHOWN, BRIDGE SEAT 2 SECTIONS SIMILAR

CROSSHATCH AREA IS TYPE IV MORTAR THAT WILL FLOW AROUND BEARINGS.

PROJECT NAME: WOODSTOCK VILLAGE	
PROJECT NUMBER: BF 020-2(43)	
FILE NAME: sl3j280sub.dgn	PLOT DATE: 11-APR-2017
PROJECT LEADER: R. YOUNG	DRAWN BY: S. COLEY
DESIGNED BY: S. COLEY	CHECKED BY: W. LAMMER
BRIDGE SEAT 1	SHEET 24 OF 51

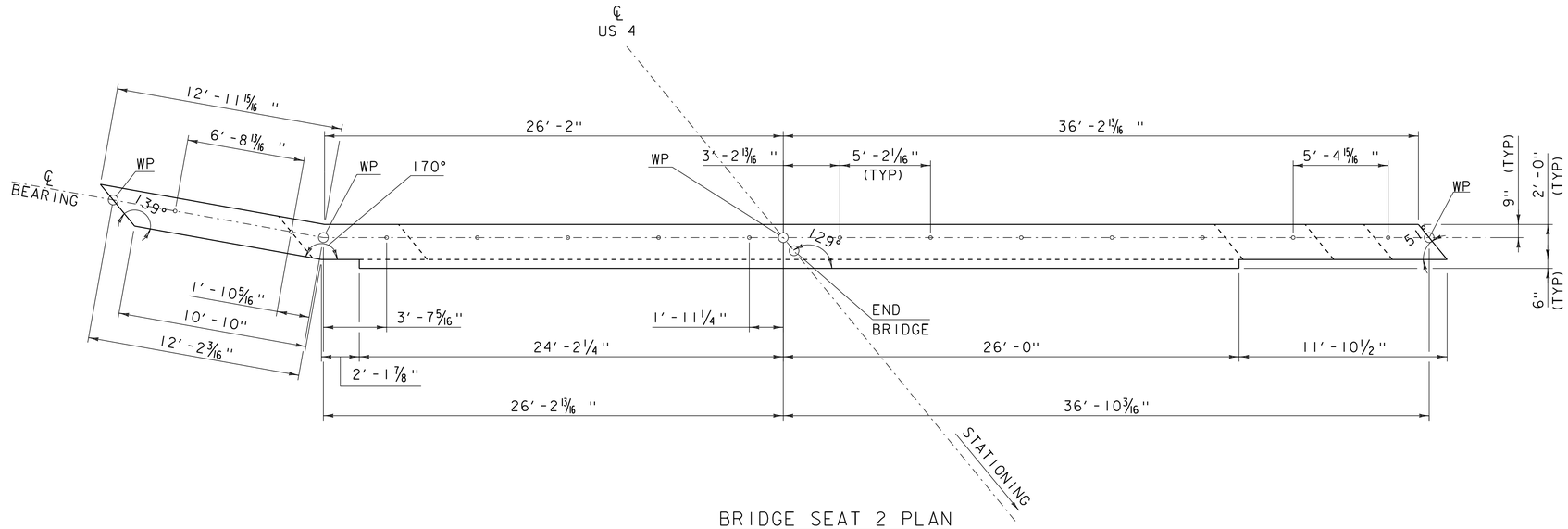

BRIDGE SEAT 2 PLAN

SCALE 1/4″ = 1′-0″

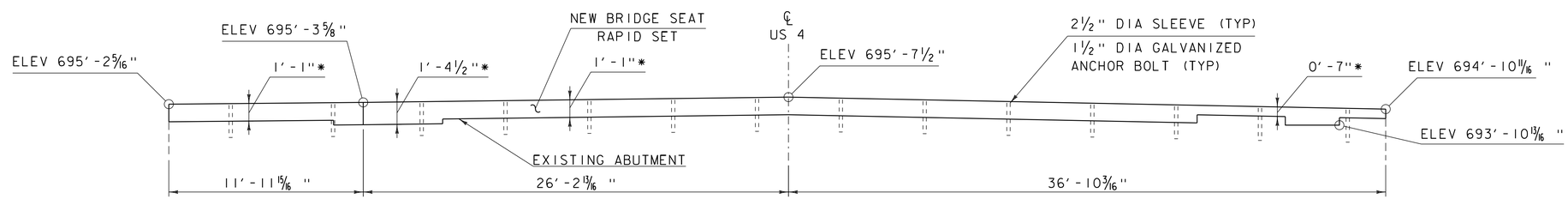

BRIDGE SEAT 2 ELEVATION ALONG CL BEARING

SCALE 1/4″ = 1′-0″

NOTES:

* CUT EXISTING ABUTMENT AS REQUIRED TO MEET THE MINIMUM DEPTH REQUIREMENTS of 0′-6″ FOR THE BRIDGE SEAT. DEPTH OF BRIDGE SEAT VARIES BASED ON EXISTING BRIDGE SEAT ELEVATION.

PROJECT NAME: WOODSTOCK VILLAGE	
PROJECT NUMBER: BF 020-2(43)	
FILE NAME: sl3j280sub.dgn	PLOT DATE: 11-APR-2017
PROJECT LEADER: R. YOUNG	DRAWN BY: S. COLEY
DESIGNED BY: S. COLEY	CHECKED BY: W. LAMMER
BRIDGE SEAT 2	SHEET 25 OF 51

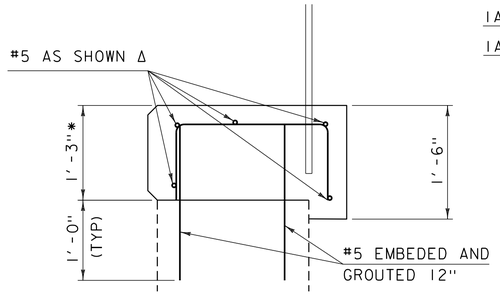

BRIDGE END DETAIL SECTION B-B
NORMAL TO CL BEARING
SCALE 1" = 1'-0"

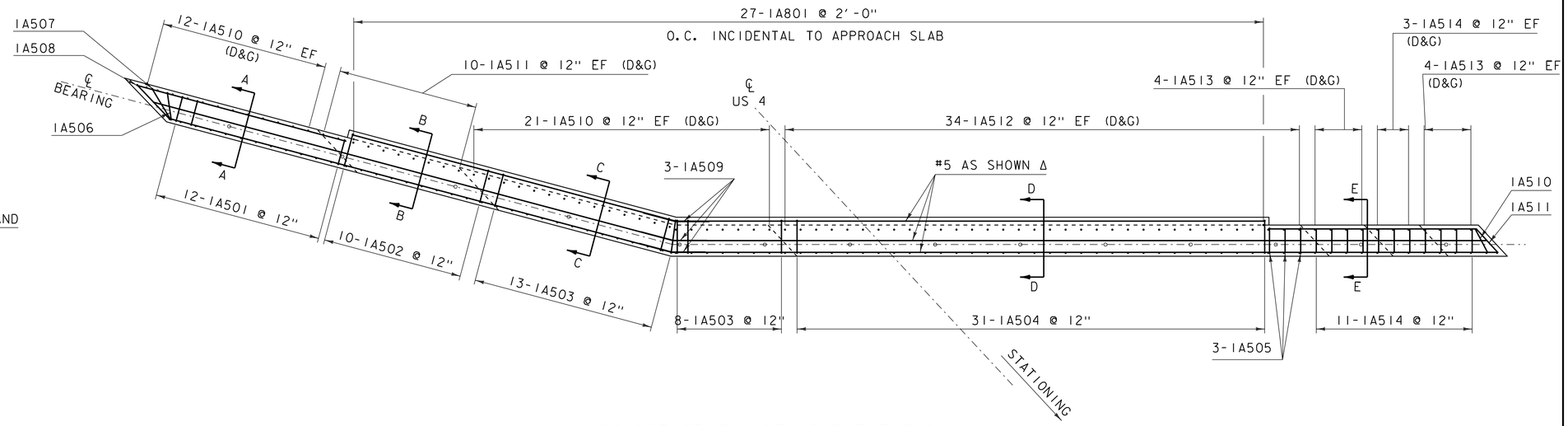

BRIDGE SEAT 1 REINFORCEMENT PLAN
SCALE 1/4" = 1'-0"

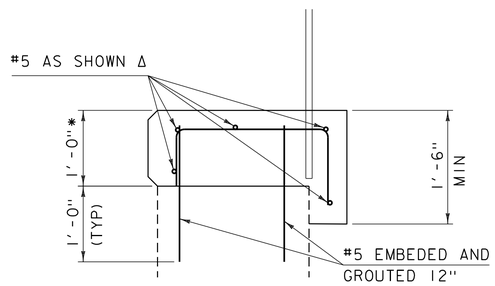

BRIDGE END DETAIL SECTION C-C
NORMAL TO CL BEARING
SCALE 1" = 1'-0"

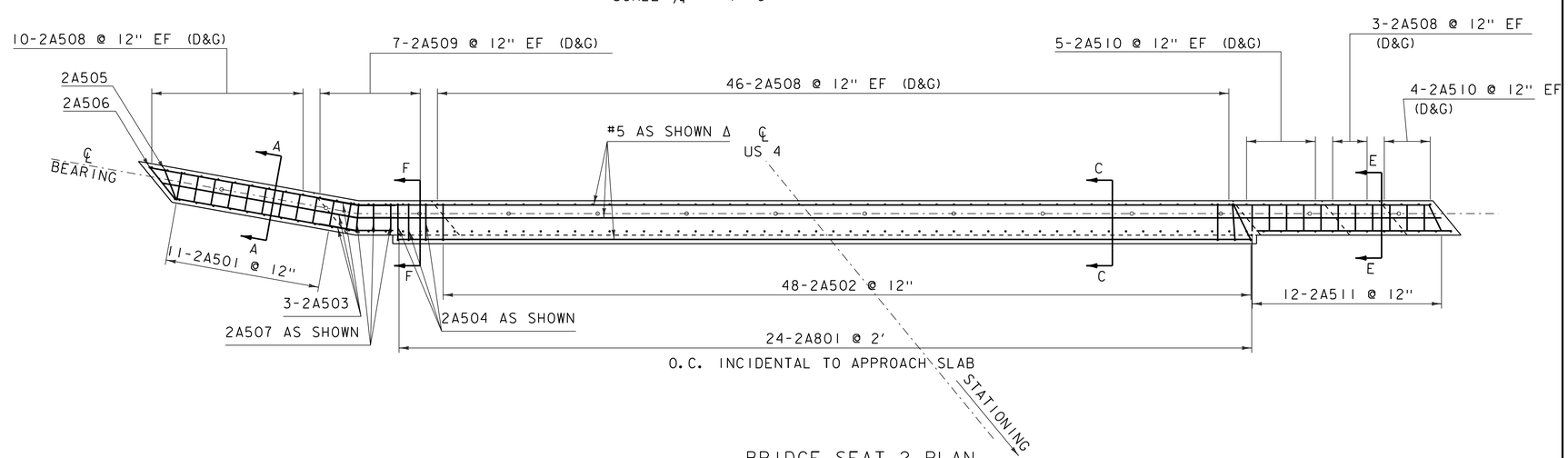

BRIDGE SEAT 2 PLAN
SCALE 1/4" = 1'-0"

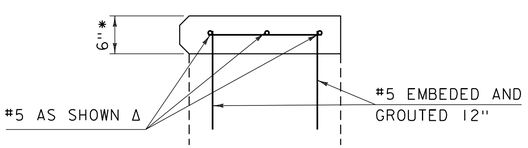

BRIDGE END DETAIL SECTION E-E
NORMAL TO CL BEARING
SCALE 1" = 1'-0"

NF = NEAR FACE
FF = FAR FACE
EF = EACH FACE
(D&G) = DRILL AND GROUT
Δ = CUT FIT IN FIELD
1½" CLEAR, UNLESS OTHERWISE SPECIFIED ON PLANS.
2'-2" BAR LAP UNLESS OTHERWISE SPECIFIED ON THE PLANS.

NOTES:
* CUT EXISTING ABUTMENT AS REQUIRED TO MEET THE MINIMUM DEPTH REQUIREMENTS FOR THE BRIDGE SEAT. DEPTH OF NEW BRIDGE SEAT VARIES DEPENDING ON ELEVATION OF EXISTING BRIDGE SEAT.

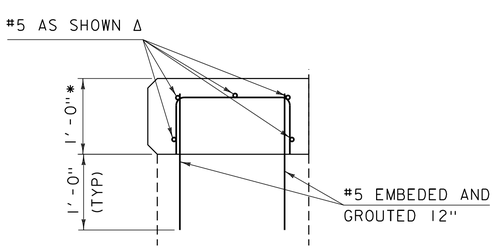

BRIDGE END DETAIL SECTION A-A
NORMAL TO CL BEARING
SCALE 1" = 1'-0"

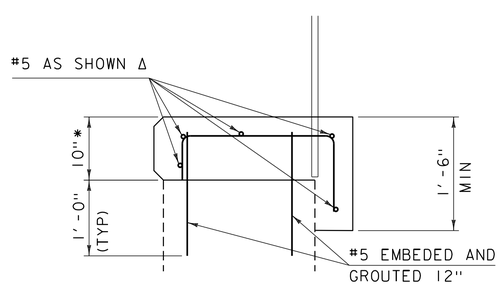

BRIDGE END DETAIL SECTION D-D
NORMAL TO CL BEARING
SCALE 1" = 1'-0"

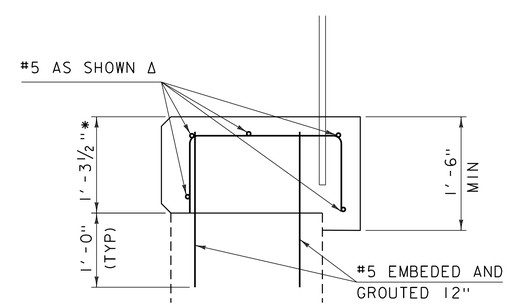

BRIDGE END DETAIL SECTION F-F
NORMAL TO CL BEARING
SCALE 1" = 1'-0"

PROJECT NAME: WOODSTOCK VILLAGE	
PROJECT NUMBER: BF 020-2(43)	
FILE NAME: s13j280sub.dgn	PLOT DATE: 11-APR-2017
PROJECT LEADER: R. YOUNG	DRAWN BY: S. COLEY
DESIGNED BY: S. COLEY	CHECKED BY: W. LAMMER
BRIDGE SEAT REINFORCEMENT	SHEET 26 OF 51

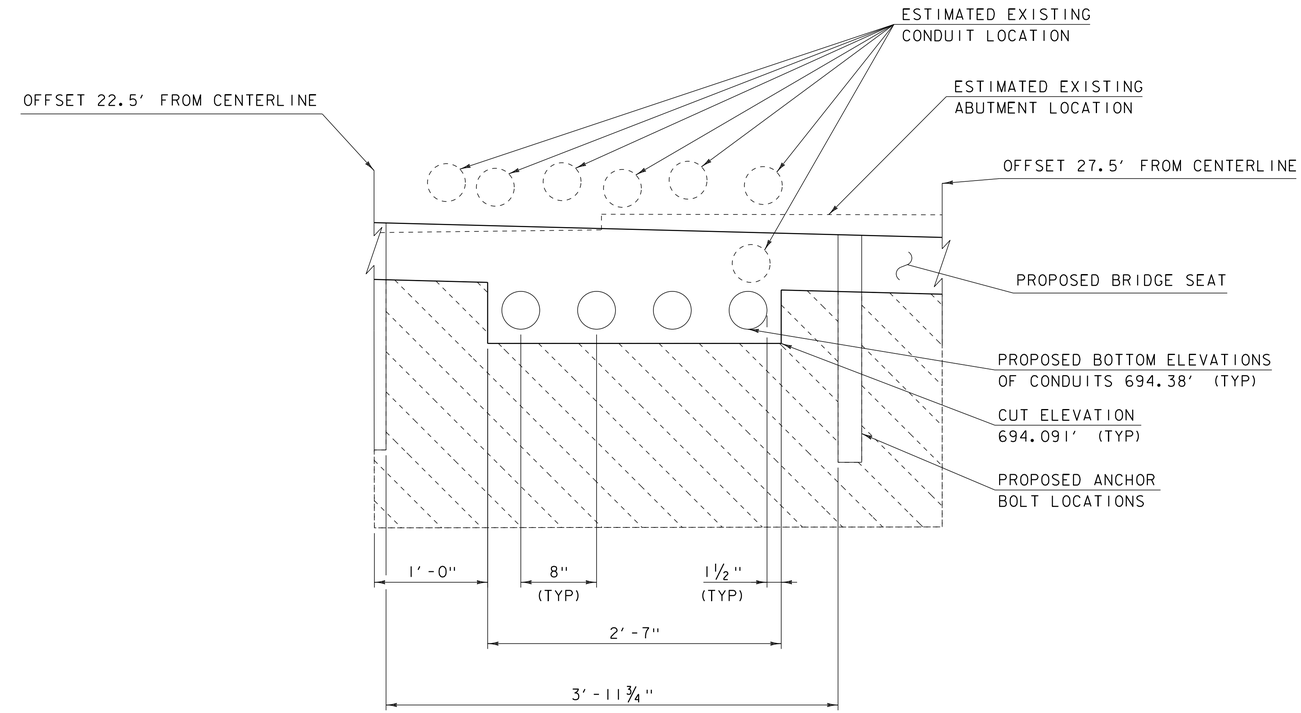

BRIDGE SEAT 1 UTILITY LOCATIONS

SCALE 1½" = 1'-0"

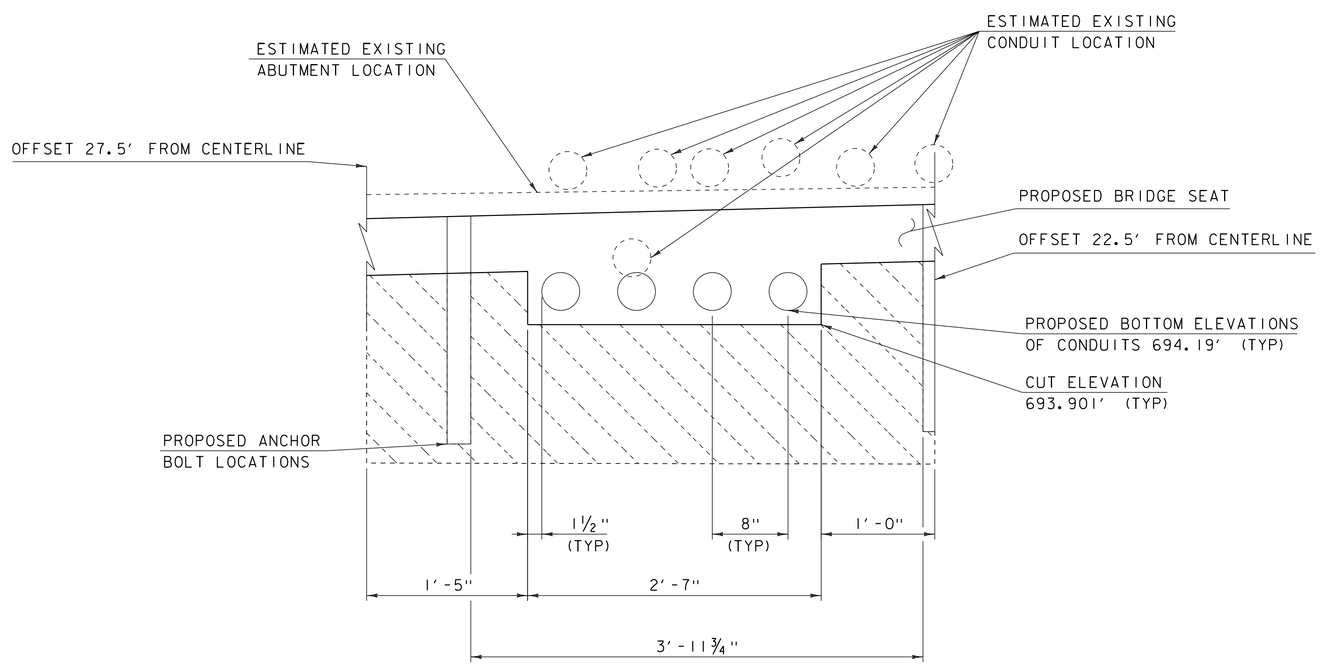

BRIDGE SEAT 2 UTILITY LOCATIONS

SCALE 1½" = 1'-0"

NOTES:

1) WIDTH OF UTILITY NOTCH MAY BE INCREASED TO ALLOW MORE CONDUITS TO BE LOWERED
2) DISTANCE BETWEEN CONDUITS MAY BE DECREASED TO ALLOW MORE CONDUITS TO BE LOWERED
3) MINIMUM DISTANCE BETWEEN UTILITY NOTCH AND THE EDGE OF THE ANCHOR BOLT IS 6 INCHES
4) MINIMUM DISTANCE BETWEEN EACH CONDUIT IS 1½ INCHES

EXISTING CONCRETE THAT IS BEING LEFT

PROJECT NAME: WOODSTOCK VILLAGE	
PROJECT NUMBER: BF 020-2(43)	
FILE NAME: sl3j280sub.dgn	PLOT DATE: 11-APR-2017
PROJECT LEADER: R. YOUNG	DRAWN BY: S. COLEY
DESIGNED BY: S. COLEY	CHECKED BY: W. LAMMER
UTILITY CONDUIT ELEVATION	SHEET 27 OF 51

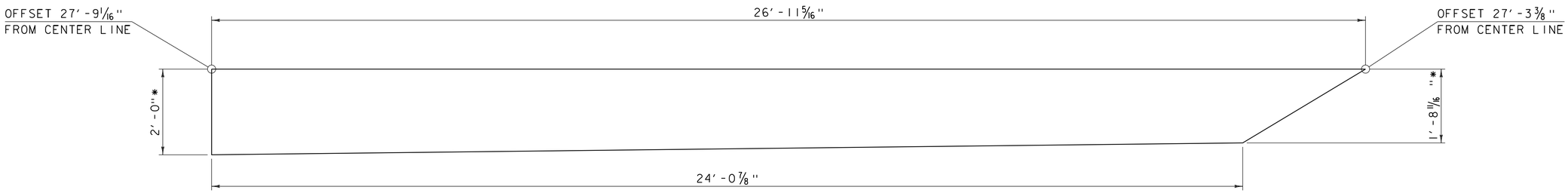

RETAINING WALL PLAN VIEW

SCALE 3/4" = 1'-0"

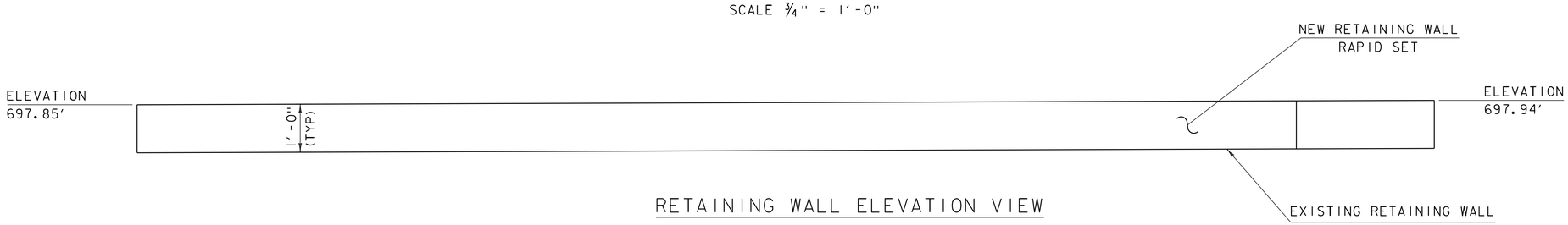

RETAINING WALL ELEVATION VIEW

SCALE 3/4" = 1'-0"

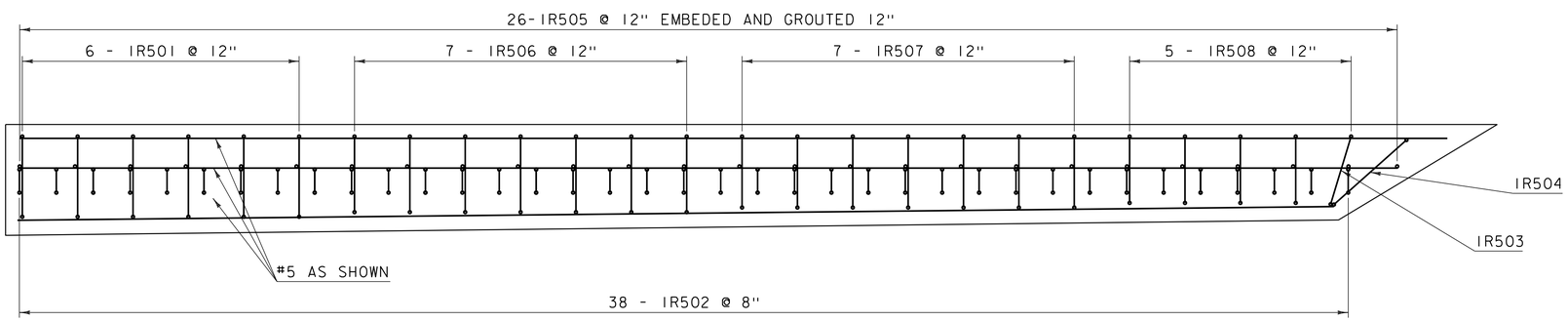

RETAINING WALL REINFORCING

SCALE 3/4" = 1'-0"

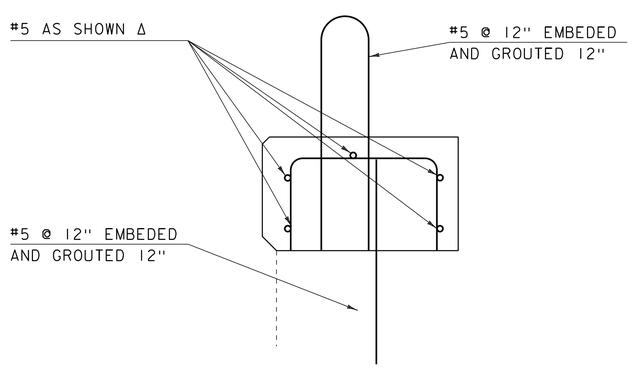

RETAINING WALL TYPICAL REINFORCEMENT

SCALE 1 1/2" = 1'-0"

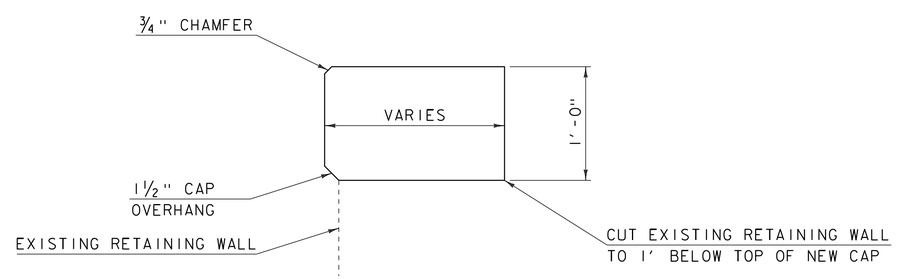

RETAINING WALL TYPICAL

SCALE 1 1/2" = 1'-0"

NF = NEAR FACE
FF = FAR FACE
EF = EACH FACE
Δ = CUT FIT IN FIELD
1 1/2" CLEAR, UNLESS OTHERWISE SPECIFIED ON PLANS.
2'-2" BAR LAP UNLESS OTHERWISE SPECIFIED ON THE PLANS.

NOTES:

1) CUT EXISTING RETAINING WALL ONE FOOT BELOW THE TOP ELEVATION OF THE NEW WALL.
2) REINFORCING STICKING OUT TO BE SET PLUMB FOR THE BRIDG RAILING.
3) THE WIDTH OF THE NE BRIDGE SEAT WILL VARY ALONG THE LENGTH.

PROJECT NAME: WOODSTOCK VILLAGE	
PROJECT NUMBER: BF 020-2(43)	
FILE NAME: s13j280sub.dgn	PLOT DATE: 11-APR-2017
PROJECT LEADER: R. YOUNG	DRAWN BY: S. COLEY
DESIGNED BY: S. COLEY	CHECKED BY: W. LAMMER
RETAINING WALL	SHEET 28 OF 51

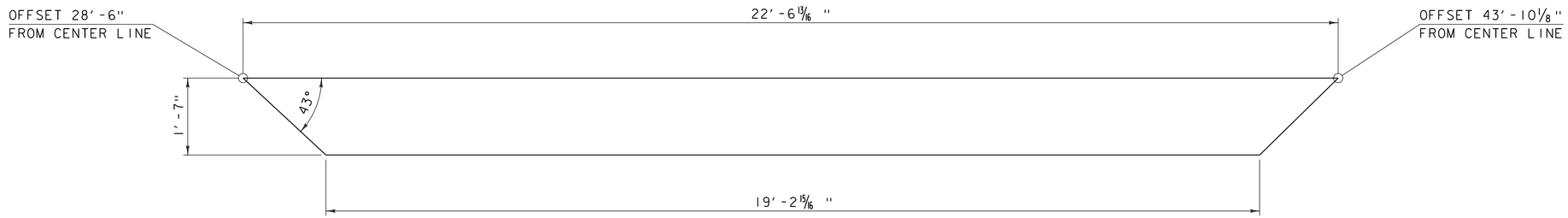

WINGWALL 3 PLAN VIEW

SCALE 3/4" = 1'-0"

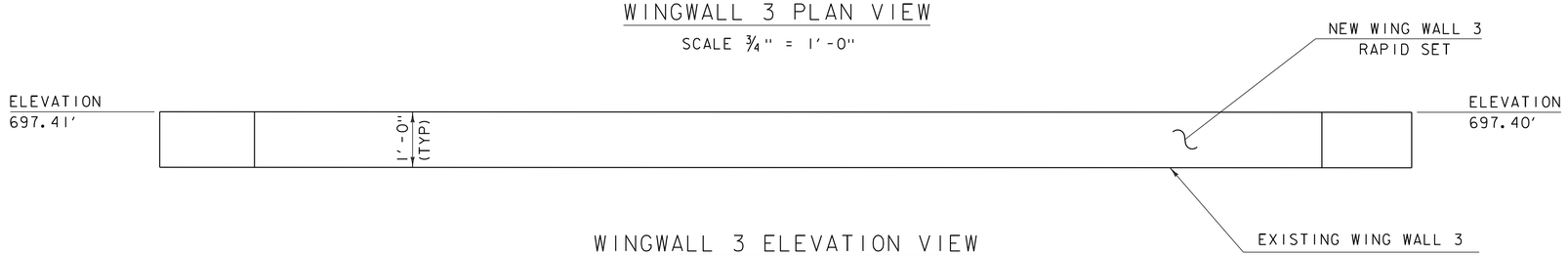

WINGWALL 3 ELEVATION VIEW

SCALE 3/4" = 1'-0"

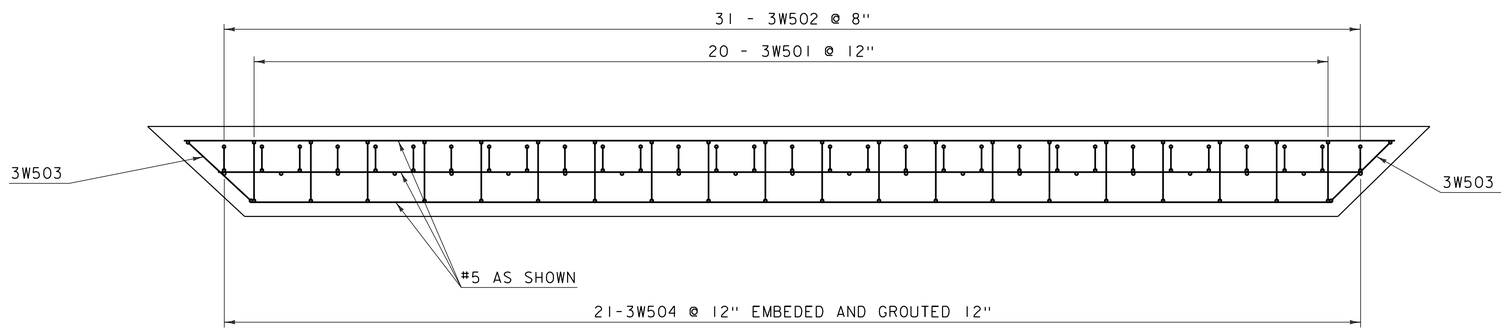

WINGWALL 3 REINFORCING

SCALE 3/4" = 1'-0"

NF = NEAR FACE
FF = FAR FACE
EF = EACH FACE
Δ = CUT FIT IN FIELD
1 1/2" CLEAR, UNLESS OTHERWISE SPECIFIED ON PLANS.
2'-2" BAR LAP UNLESS OTHERWISE SPECIFIED ON THE PLANS.

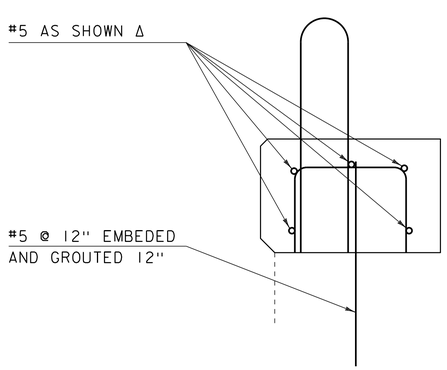

WINGWALL 3 TYPICAL REINFORCEMENT

SCALE 1 1/2" = 1'-0"

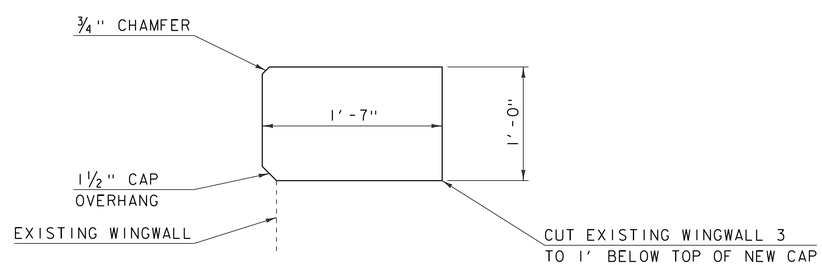

WINGWALL 3 TYPICAL

SCALE 1 1/2" = 1'-0"

NOTES:
CUT EXISTING WINGWALL ONE FOOT BELOW THE TOP ELEVATION OF THE NEW WALL.

REINFORCING STICKING OUT TO BE SET PLUMB FOR THE BRIDGE RAILING.

PROJECT NAME: WOODSTOCK VILLAGE	
PROJECT NUMBER: BF 020-2(43)	
FILE NAME: sl3j280sub.dgn	PLOT DATE: 11-APR-2017
PROJECT LEADER: R. YOUNG	DRAWN BY: S. COLEY
DESIGNED BY: S. COLEY	CHECKED BY: W. LAMMER
WINGWALL 3	SHEET 29 OF 51

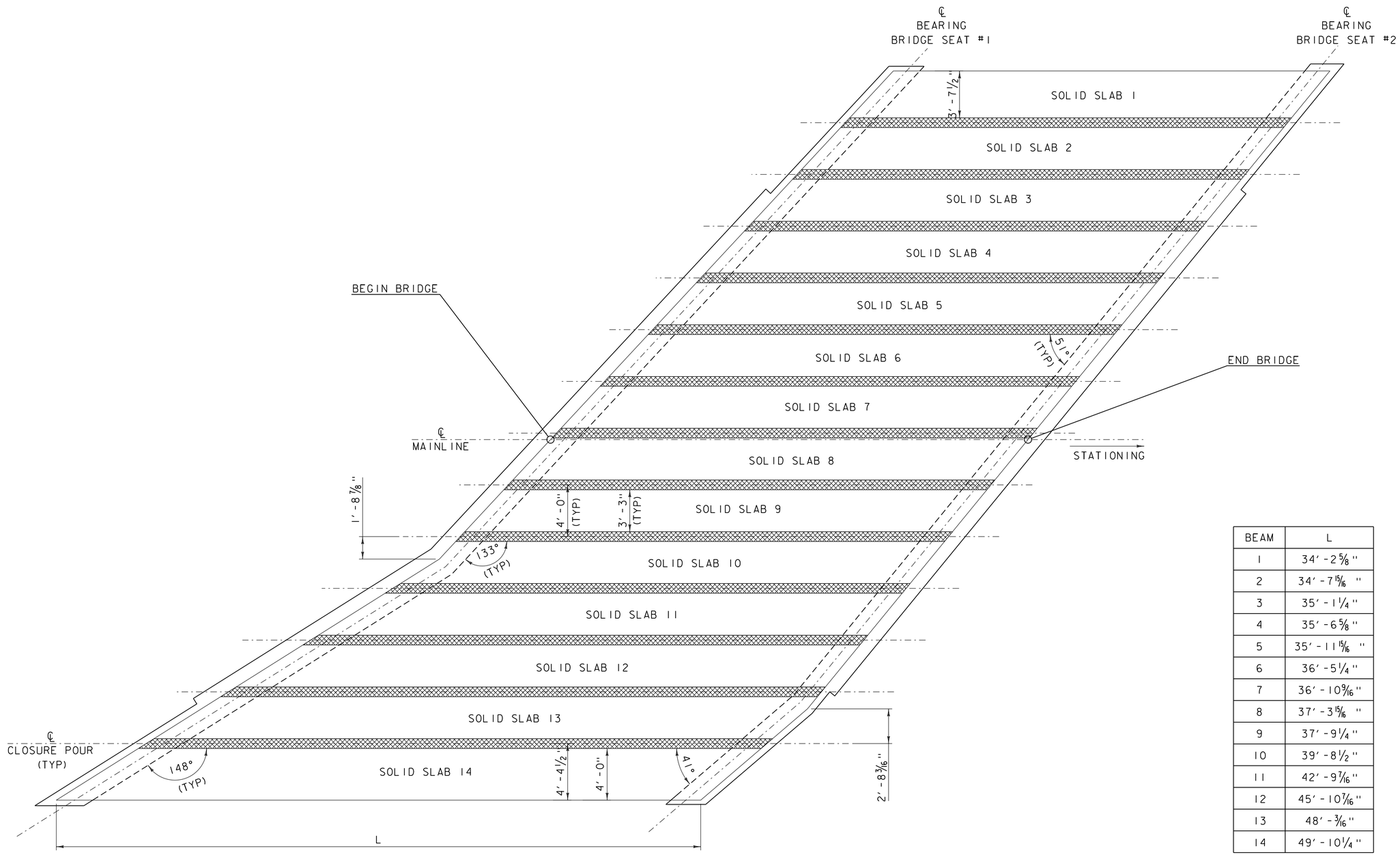

BEAM	L
1	34'-2⅝"
2	34'-7¹⁵⁄₁₆"
3	35'-1¼"
4	35'-6⅝"
5	35'-11¹⁵⁄₁₆"
6	36'-5¼"
7	36'-10⁹⁄₁₆"
8	37'-3¹⁵⁄₁₆"
9	37'-9¼"
10	39'-8½"
11	42'-9⁷⁄₁₆"
12	45'-10⁷⁄₁₆"
13	48'-³⁄₁₆"
14	49'-10¼"

DECK PLAN

SCALE 1/4" = 1'-0"

HIGH PERFORMANCE RAPID SET CONCRETE

NOTE:
BITUMINOUS CONCRETE PAVEMENT IN DECK PLAN VIEW IS OMITTED FOR CLARITY

PROJECT NAME: WOODSTOCK VILLAGE
PROJECT NUMBER: BF 020-2(43)

FILE NAME: s13j280sup.dgn
PROJECT LEADER: R. YOUNG
DESIGNED BY: S. COLEY
SOLID SLAB FRAMING PLAN

PLOT DATE: 11-APR-2017
DRAWN BY: S. COLEY
CHECKED BY: W. LAMMER
SHEET 30 OF 51

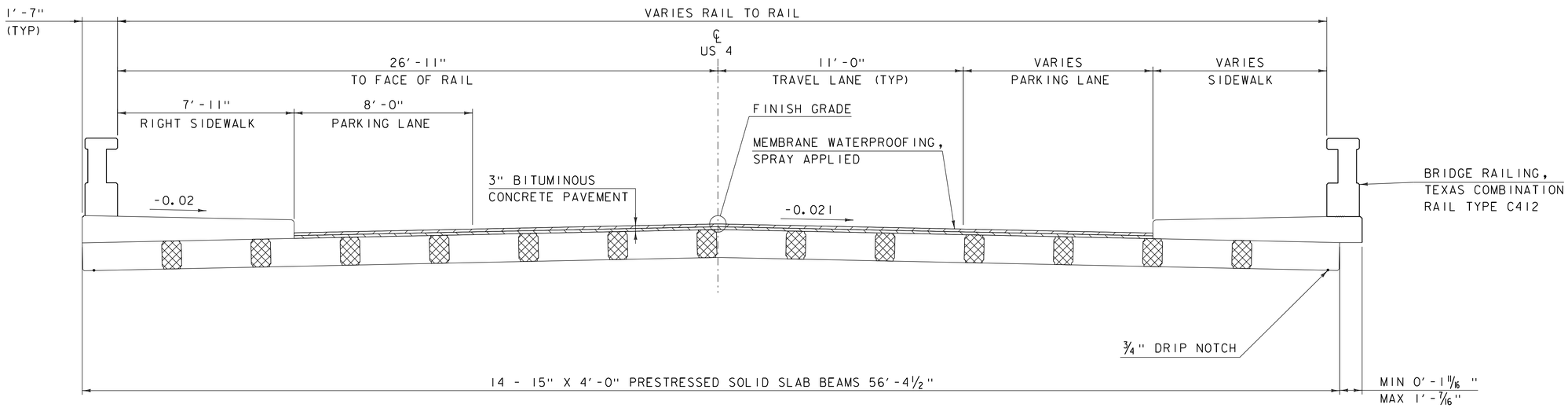

BRIDGE TYPICAL SECTION

SCALE 3/8" = 1'-0"

BITUMINOUS CONCRETE PAVEMENT

HIGH PERFORMANCE RAPID SET CONCRETE

PROJECT NAME: WOODSTOCK VILLAGE	
PROJECT NUMBER: BF 020-2(43)	
FILE NAME: s13j280sup.dgn	PLOT DATE: 11-APR-2017
PROJECT LEADER: R. YOUNG	DRAWN BY: S. COLEY
DESIGNED BY: S. COLEY	CHECKED BY: W. LAMMER
SOLID SLAB TYPICAL SECTION	SHEET 31 OF 51

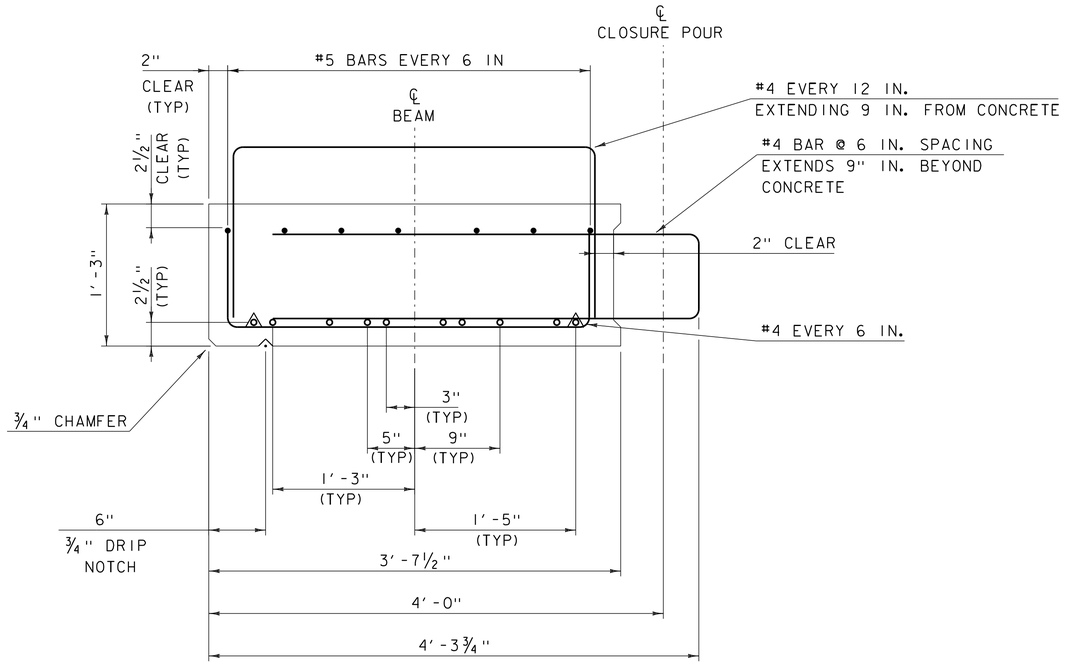

SLABS 1

SCALE 1½" = 1'-0"

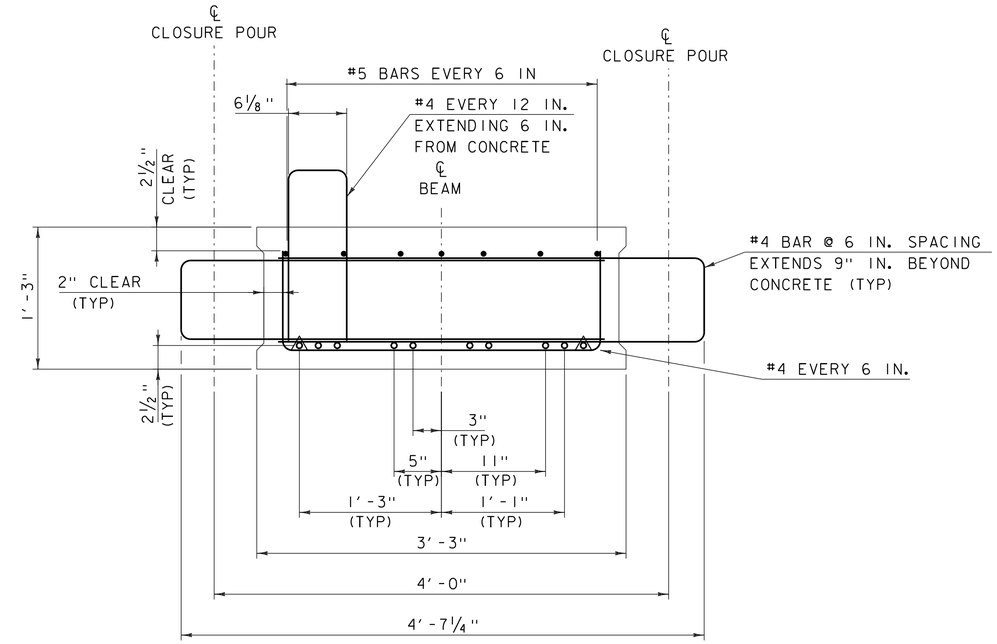

SLAB 3

SCALE 1½" = 1'-0"

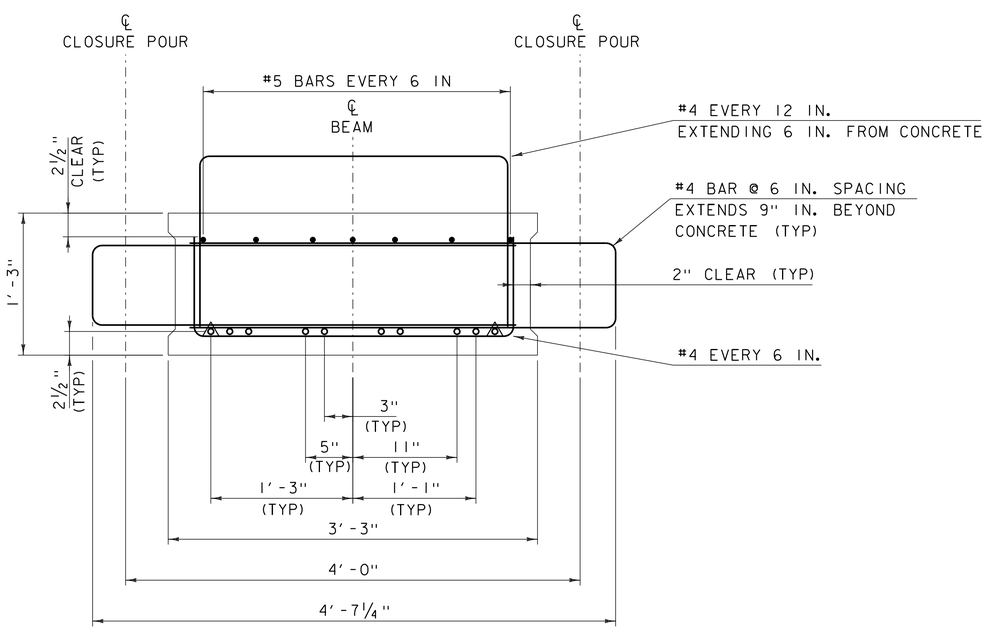

SLAB 2

SCALE 1½" = 1'-0"

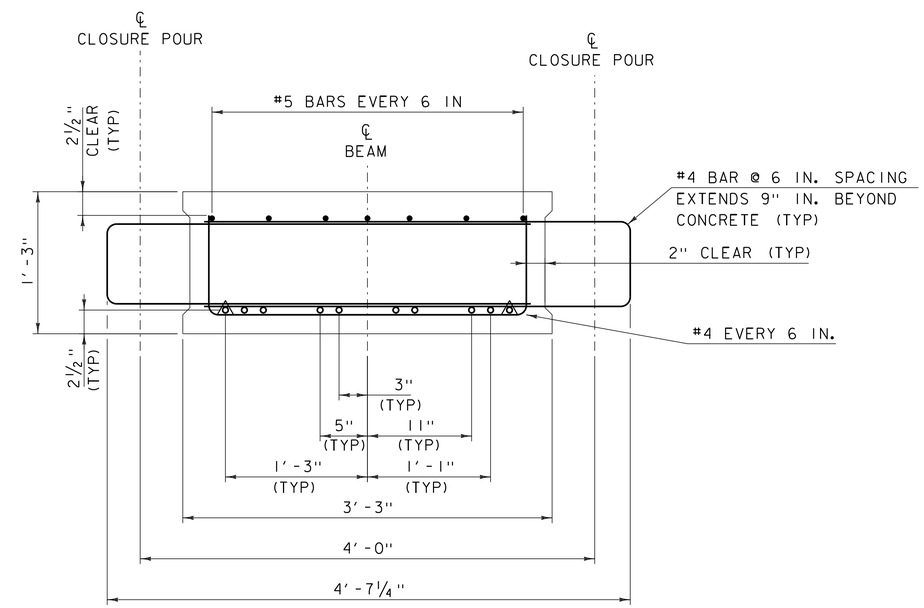

SLABS 4, 5, 6, 7, AND 9

SCALE 1½" = 1'-0"

△ DEBONDED 4'-0"

PROJECT NAME: WOODSTOCK VILLAGE	
PROJECT NUMBER: BF 020-2(43)	
FILE NAME: sl3j280sup.dgn	PLOT DATE: 11-APR-2017
PROJECT LEADER: R. YOUNG	DRAWN BY: S. COLEY
DESIGNED BY: S. COLEY	CHECKED BY: W. LAMMER
SOLID SLAB DETAILS 1	SHEET 32 OF 51

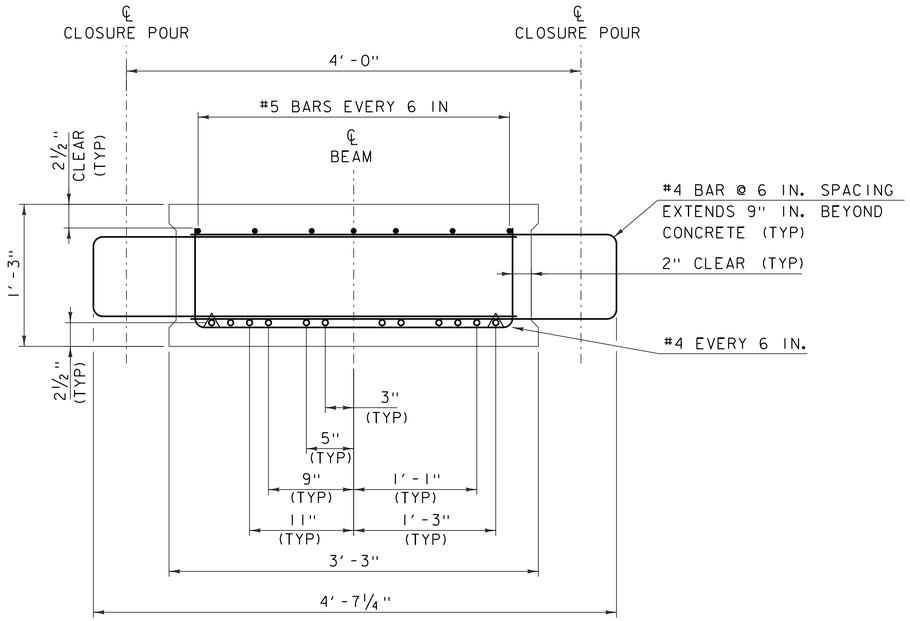

SLABS 10, 11, AND 12

SCALE 1½" = 1' -0"

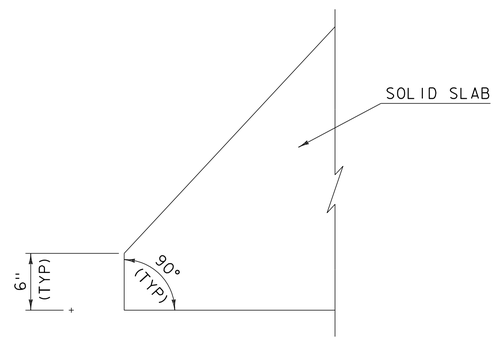

CLIPPED END DETAIL

SCALE 1½" = 1' -0"

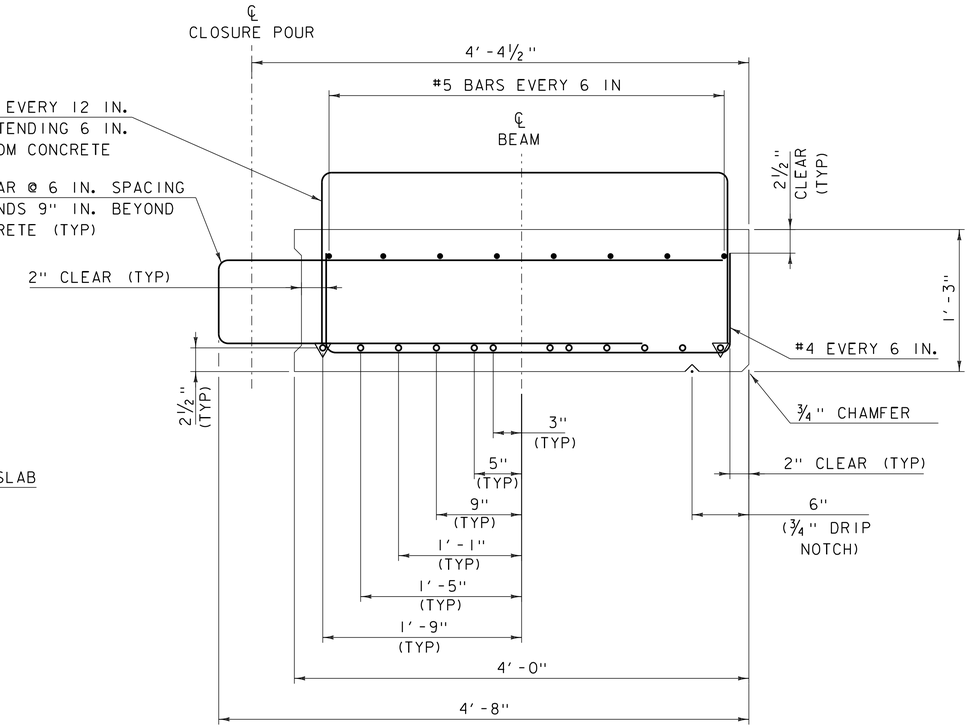

SLAB 14

SCALE 1½" = 1' -0"

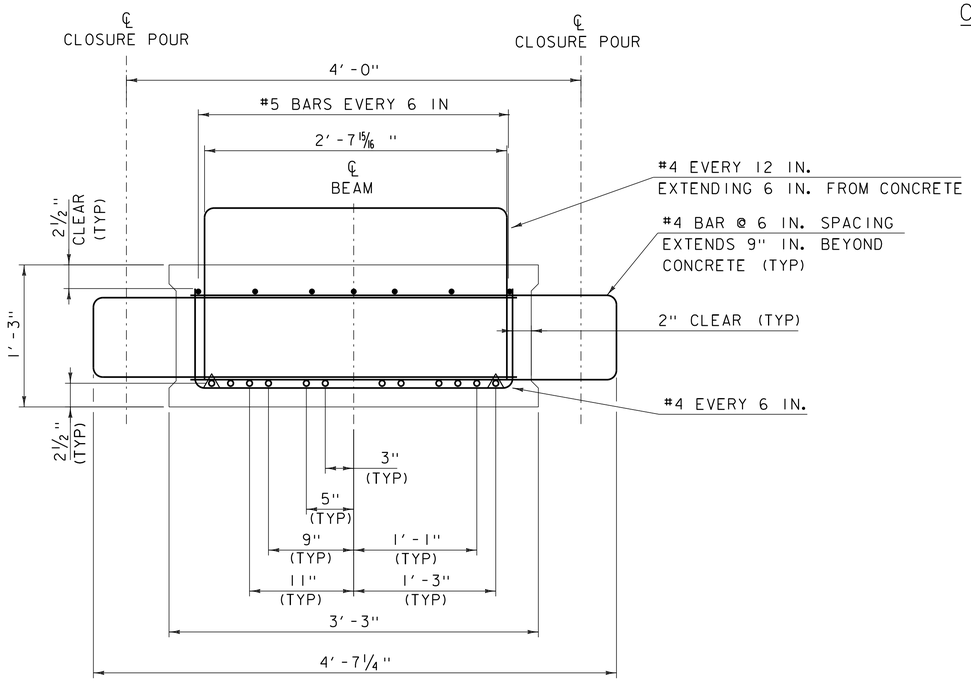

SLAB 13

SCALE 1½" = 1' -0"

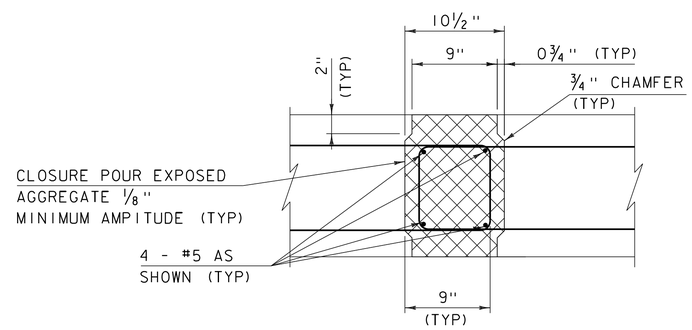

CONNECTION DETAIL SECTION

SCALE 1½" = 1' -0"

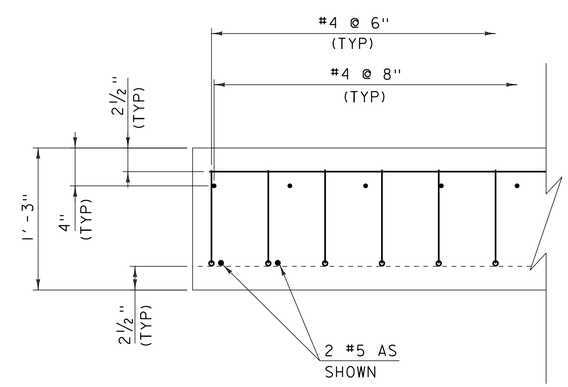

ADDITIONAL END BEAM REINFORCING

SCALE 1½" = 1' -0"

△ DEBONDED 4' -0"

▽ DEBONDED 2' -0"

⊠ RAPID SET CONCRETE

PROJECT NAME: WOODSTOCK VILLAGE	
PROJECT NUMBER: BF 020-2(43)	
FILE NAME: sl3j280sup.dgn	PLOT DATE: 11-APR-2017
PROJECT LEADER: R. YOUNG	DRAWN BY: S. COLEY
DESIGNED BY: S. COLEY	CHECKED BY: W. LAMMER
SOLID SLAB DETAILS 2	SHEET 33 OF 51

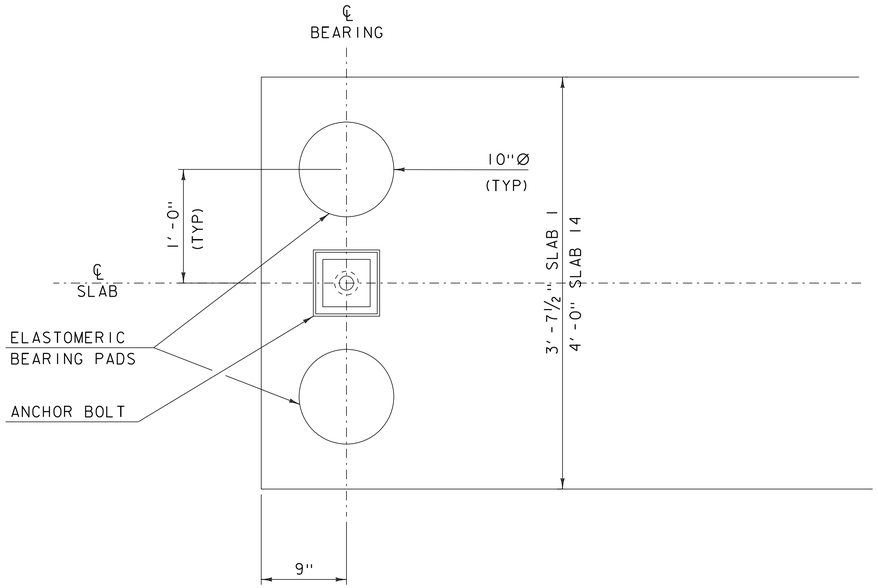

SLABS 1 AND 14
BEARING PAD PLACEMENT DETAIL
SCALE 1½" = 1'-0"

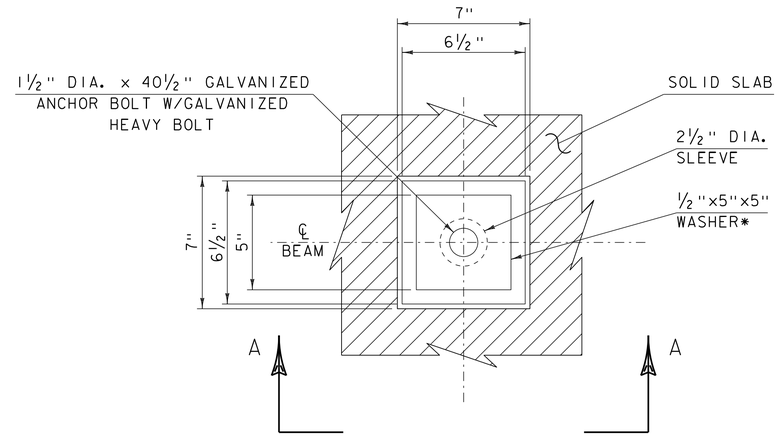

END BRIDGE ANCHOR
BOLT DETAIL
SCALE ¾" = 1'-0"

NOTES

* ½"x5"x5" WASHER WITH 1½" DIA. HOLE (GALVANIZED)

1) SEE VAOT SPECIFICATION 714.08 FOR ANCHOR BOLTS & NUTS
2) ITEM 531.16, "BEARING DEVICE ASSEMBLY, PLAIN ELASTOMERIC PAD" IS THE PAY ITEMS FOR THE BEARINGS.
3) ALTERNATE CONFIGURATIONS FOR ELASTOMERIC BEARINGS MAY BE SUBMITTED FOR APPROVAL. ANY ALTERNATIVE BEARING SUBMITTED SHALL BE DESIGNED AND CERTIFIED TO MEET THE LOADS AND CRITERIA SHOWN ON THIS SHEET AND MAINTAIN THE ANCHORAGE SYSTEM SHOWN. THE BEARINGS SHALL BE DESIGNED ACCORDING TO AASHTO "LRFD BRIDGE DESIGN SPECIFICATIONS".
6) DESIGN CRITERIA:
   A. TEMPERATURE RANGE: 80 F
   B. 60 DUROMETER ELASTOMERIC
   C. MAXIMUM BEARING STRESS: 1000 psi
   D. DESIGN ROTATION: 0.016 rad
   E. UNFACTORED REATIONS:
      RDL: 10.225 KIPS
7) COMPRESSIBLE SEALER. THE FABRICATOR SHALL SUPPLY A SELF ADHESIVE COMPRESSIBLE SEALER BETWEEN THE BOTTOM OF THE UNITS AND THE BRIDGE SEAT. THIS COMPRESSIBLE SEALER SHALL SURROUND THE 2½" DIA SLEEVE IN THE UNIT. THE PURPOSE OF THE SEALER IS TO FACILITATE PLACEMENT OF THE "JOINT SEALER" AROUND THE ANCHOR BOLTS. PAYMENT WILL BE INCLUDED IN THE UNIT PRICE BID FOR ITEM 535.17, "BEARING DEVICE ASSEMBLY, STEEL REINFORCED ELASTOMERIC PAD".

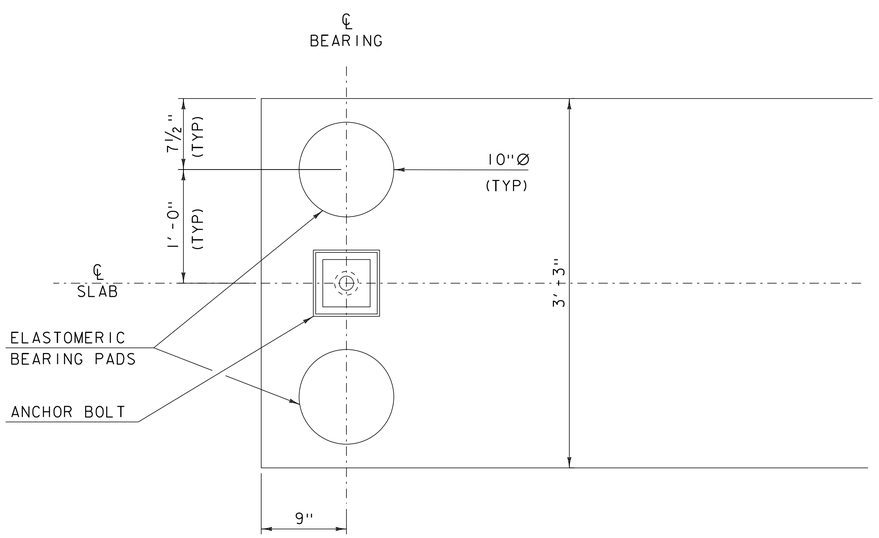

BEARING PAD PLACEMENT DETAIL
SCALE 1½" = 1'-0"

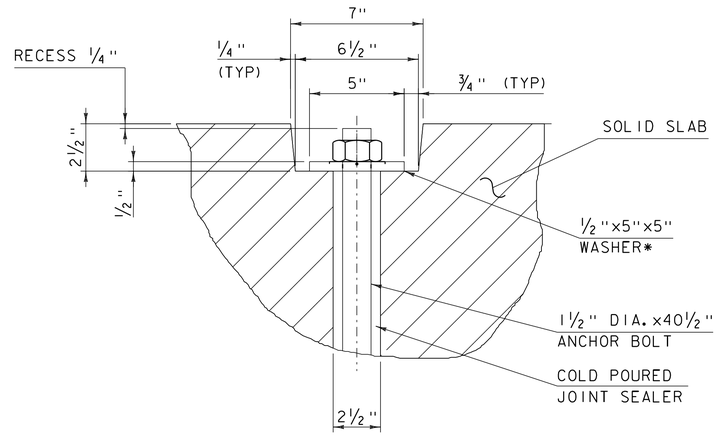

SECTION A-A
SCALE ¾" = 1'-0"

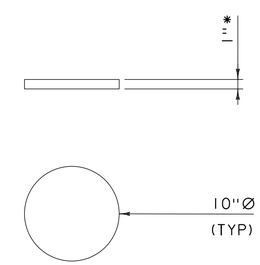

ELASTOMERIC BEARING DETAIL
SCALE 1½" = 1'-0"

* 1" LAYER OF ELASTOMERIC

PROJECT NAME: WOODSTOCK VILLAGE	
PROJECT NUMBER: BF 020-2(43)	
FILE NAME: sl3j280sup.dgn	PLOT DATE: 11-APR-2017
PROJECT LEADER: R. YOUNG	DRAWN BY: S. COLEY
DESIGNED BY: S. COLEY	CHECKED BY: W. LAMMER
ELASTOMERIC BEARING DETAILS	SHEET 34 OF 51

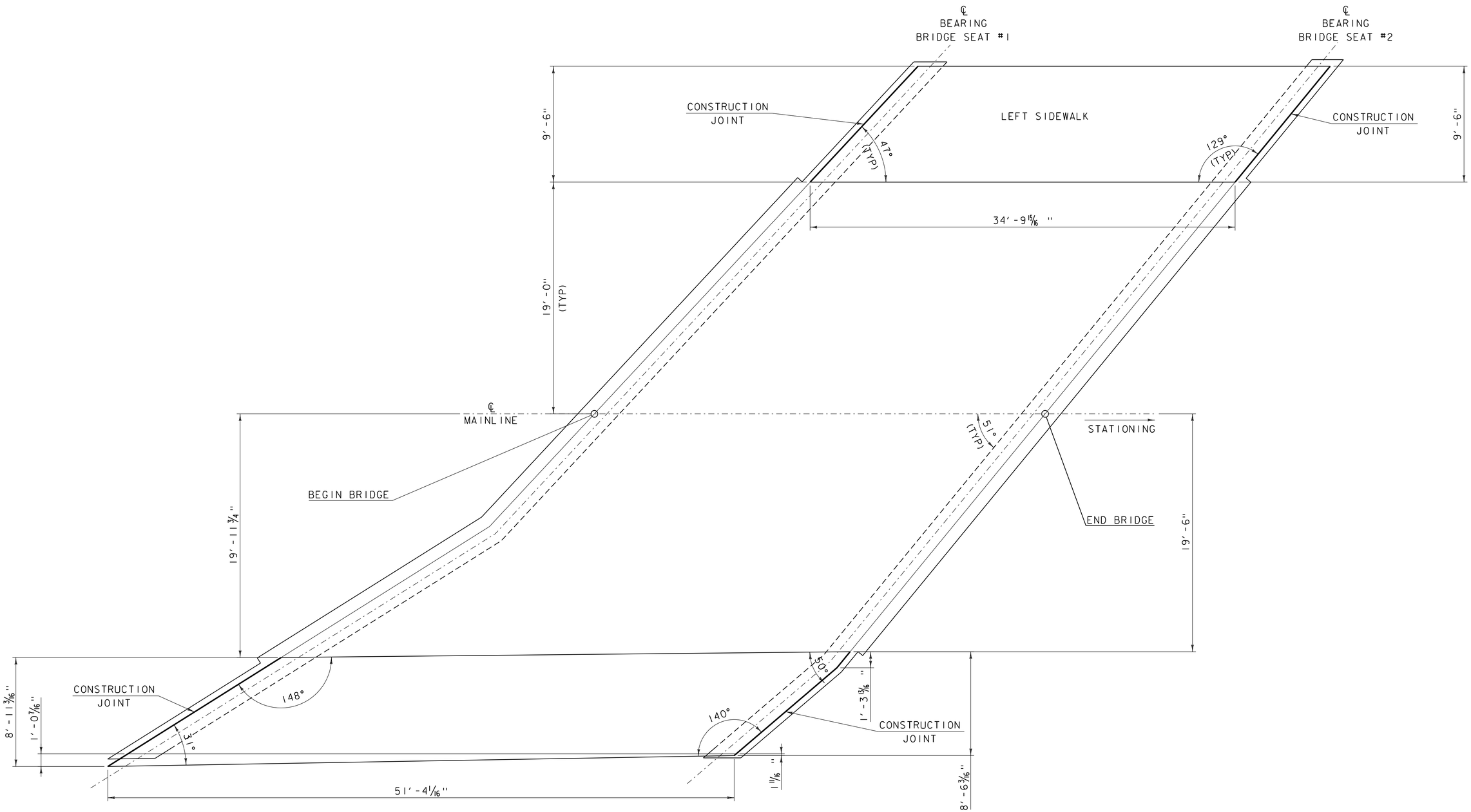

BRIDGE SIDEWALK LAYOUT

SCALE 1/4" = 1'-0"

PROJECT NAME: WOODSTOCK VILLAGE	
PROJECT NUMBER: BF 020-2(43)	
FILE NAME: s13j280sup.dgn	PLOT DATE: 11-APR-2017
PROJECT LEADER: R. YOUNG	DRAWN BY: S. COLEY
DESIGNED BY: S. COLEY	CHECKED BY: W. LAMMER
BRIDGE SIDEWALK LAYOUT	SHEET 35 OF 51

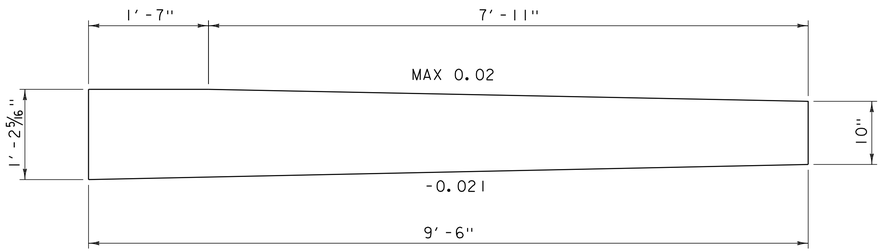

LEFT BRIDGE SIDEWALK

SCALE 1" = 1'-0"

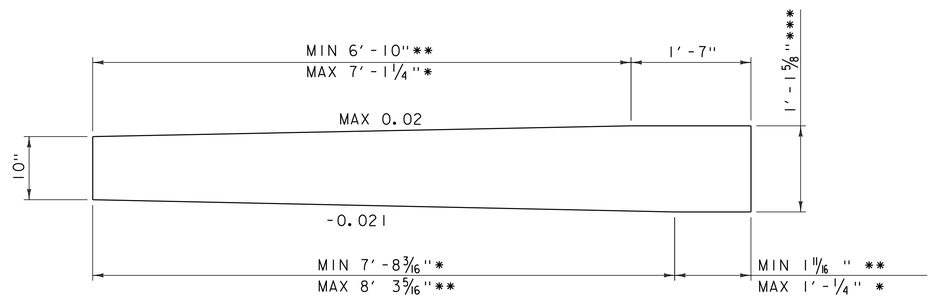

* LOCATED AT STA 334+15.61
** LOCATED AT STA 334+65.31
*** THICKNESS MAY VARY

RIGHT BRIDGE SIDEWALK

SCALE 1" = 1'-0"

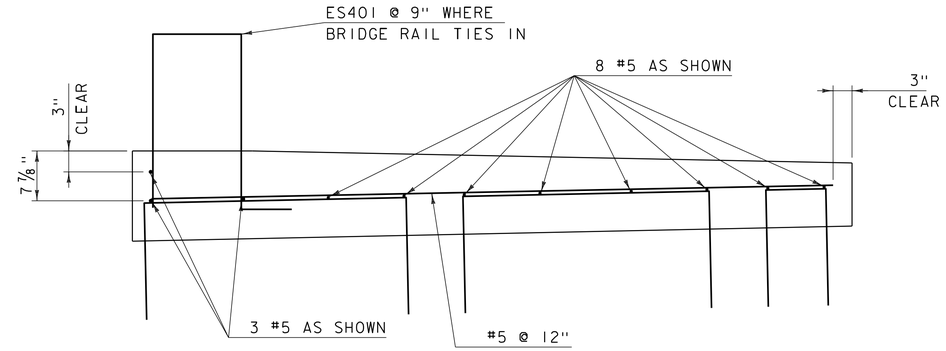

LEFT BRIDGE SIDEWALK REINFORCING

SCALE 1" = 1'-0"

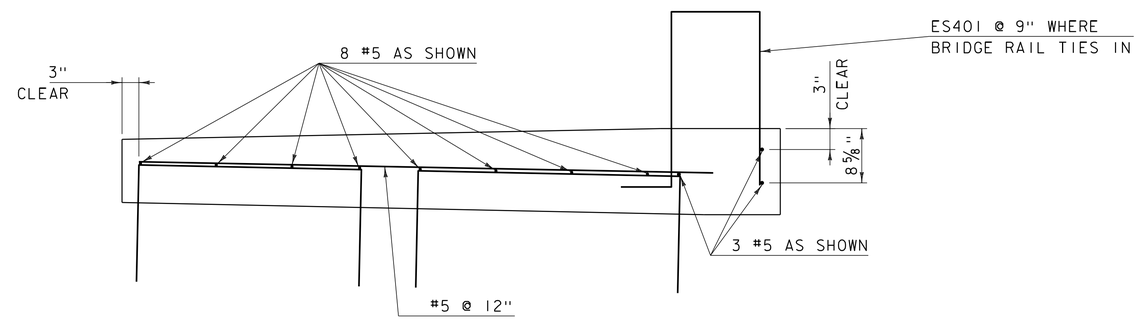

RIGHT BRIDGE SIDEWALK REINFORCING

SCALE 1" = 1'-0"

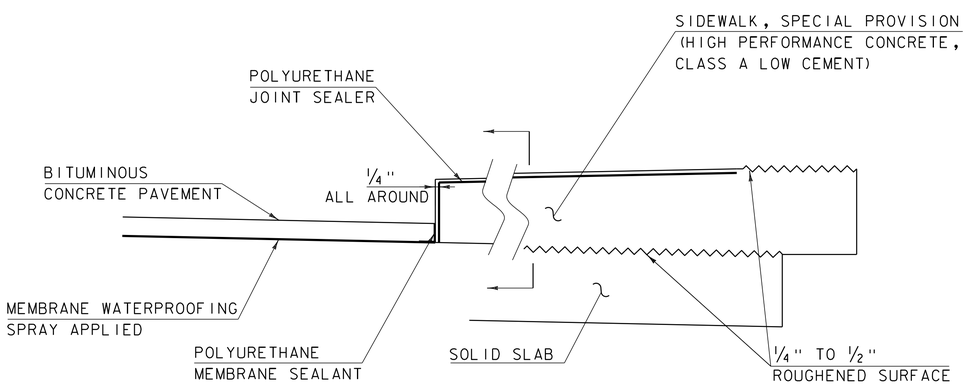

TYPICAL SIDEWALK THROUGH
CONCRETE SIDEWALK CONSTRUCTION JOINT

NTS

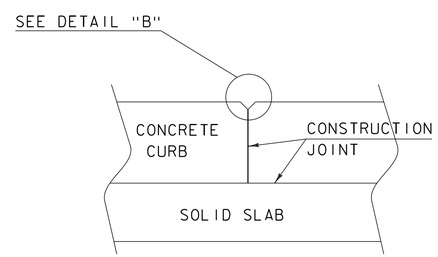

SECTION B-B

NTS

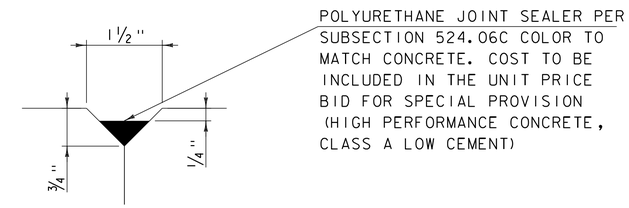

DETAIL "B"

NTS

NOTES:
2'-2" BAR LAP UNLESS OTHERWISE SPECIFIED ON THE PLANS

REINFORCING IN THE BRIDGE SIDEWALK WILL BE PAID UNDER ITEM 507.13 REINFORCING STEEL, LEVEL III

SIDEWALK NOTES:

1. THE SIDEWALKS SHALL BE CONSTRUCTED WITH CONSTRUCTION JOINTS SPACE AT A MAXIMUM OF 15'-0" CENTER TO CENTER. CONCRETE SIDEWALKS MAY BE PLACED IN ONE CONTINUOUS OPERATION IF APPROVED BY THE STRUCTURES ENGINEER.

2. WHEN CURB JOINTS ARE USED THE SIDEWALKS SHALL BE PLACED IN ALTERNATE SECTIONS WITH A MINIMUM OF 48 HOUR DELAY BETWEEN ADJACENT PLACEMENTS.

3. LONGITUDINAL REINFORCING SHALL BE CONTINOUS THROUGH BRIDGE SIDEWALK .

PROJECT NAME: WOODSTOCK VILLAGE	
PROJECT NUMBER: BF 020-2(43)	
FILE NAME: s13j280sup.dgn	PLOT DATE: 11-APR-2017
PROJECT LEADER: R. YOUNG	DRAWN BY: S. COLEY
DESIGNED BY: S. COLEY	CHECKED BY: W. LAMMER
BRIDGE SIDEWALK DETAILS	SHEET 36 OF 51

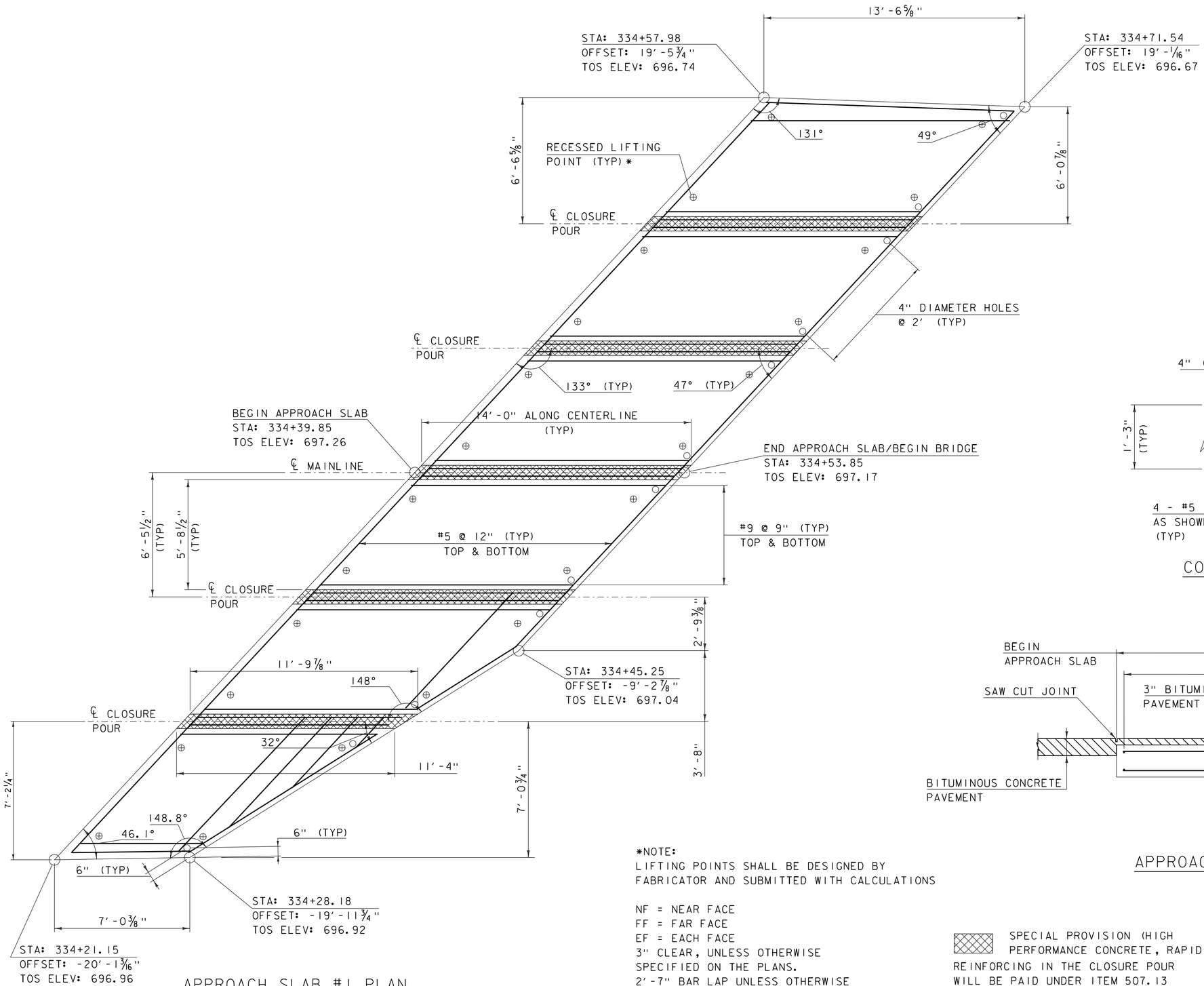

APPROACH SLAB #1 PLAN

SCALE 3/8" = 1'-0"

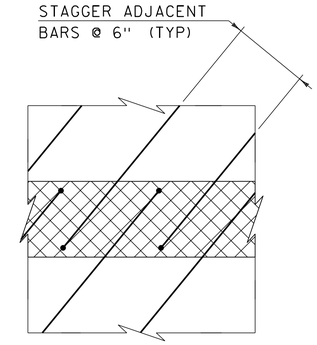

CONNECTION DETAIL PLAN

SCALE 1" = 1'-0"

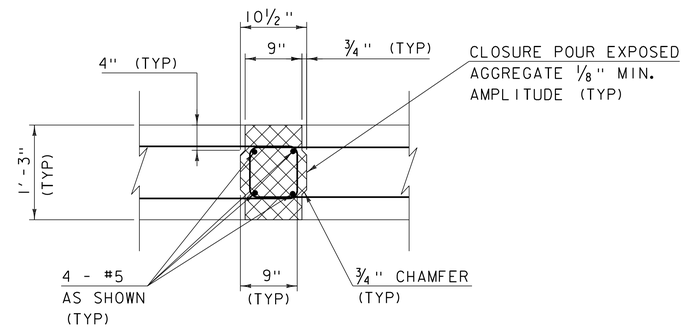

CONNECTION DETAIL SECTION

SCALE 1" = 1'-0"

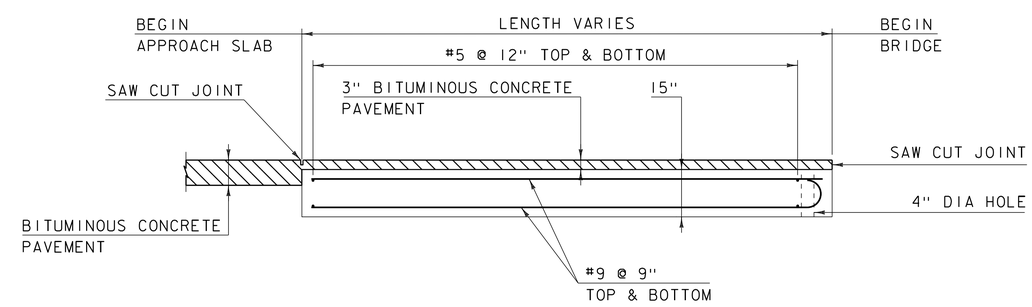

APPROACH SLAB #1 ELEVATION

SCALE 1/2" = 1'-0"

*NOTE:
LIFTING POINTS SHALL BE DESIGNED BY
FABRICATOR AND SUBMITTED WITH CALCULATIONS

NF = NEAR FACE
FF = FAR FACE
EF = EACH FACE
3" CLEAR, UNLESS OTHERWISE
SPECIFIED ON THE PLANS.
2'-7" BAR LAP UNLESS OTHERWISE
SPECIFIED ON THE PLANS.

SPECIAL PROVISION (HIGH
PERFORMANCE CONCRETE, RAPID SET)
REINFORCING IN THE CLOSURE POUR
WILL BE PAID UNDER ITEM 507.13
REINFORCING STEEL, LEVEL III (FPQ)

PROJECT NAME: WOODSTOCK VILLAGE	
PROJECT NUMBER: BF 020-2(43)	
FILE NAME: s13j280appslab.dgn	PLOT DATE: 11-APR-2017
PROJECT LEADER: R. YOUNG	DRAWN BY: S. COLEY
DESIGNED BY: S. COLEY	CHECKED BY: W. LAMMER
APPROACH SLAB 1	SHEET 37 OF 51

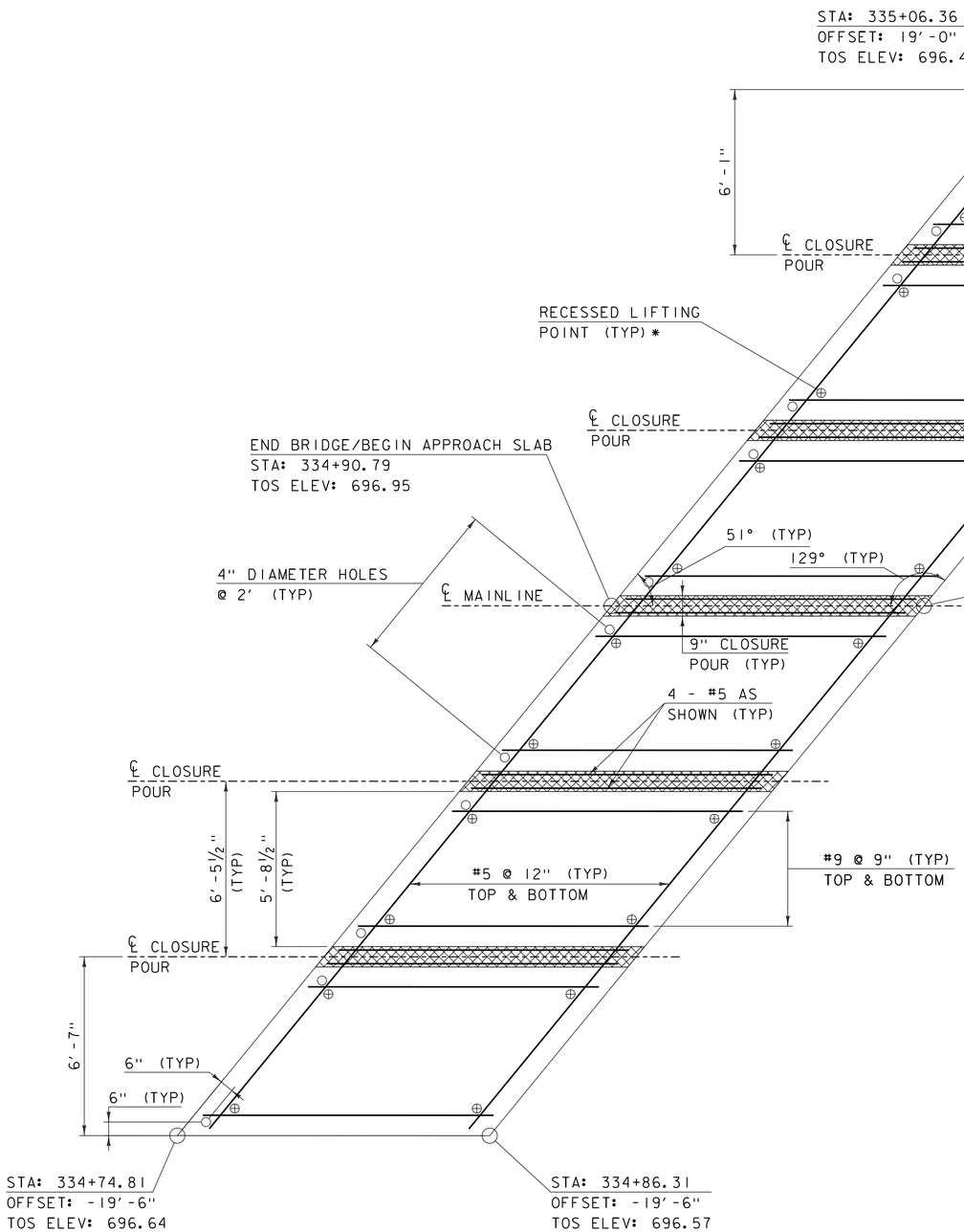

APPROACH SLAB #2 PLAN VIEW

SCALE ⅜" = 1'-0"

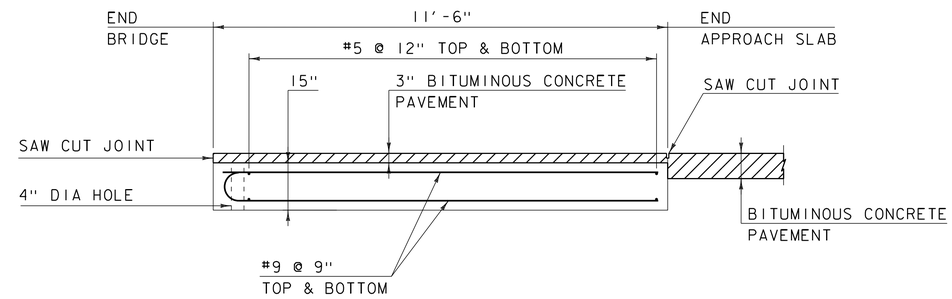

APPROACH SLAB #2 ELEVATION

SCALE ½" = 1'-0"

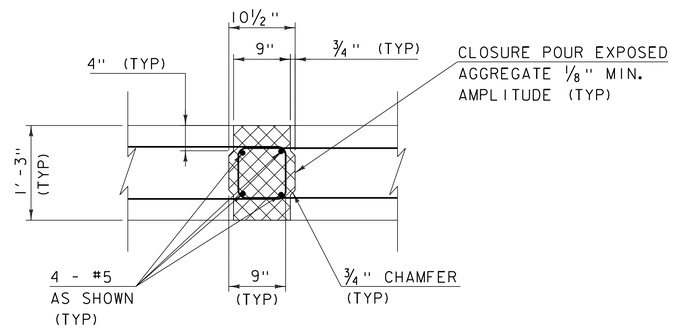

CONNECTION DETAIL SECTION

SCALE 1" = 1'-0"

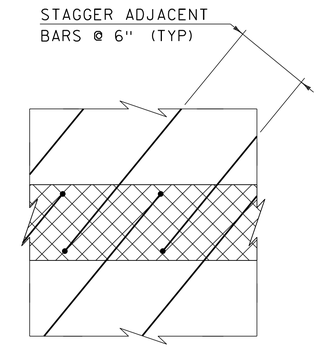

CONNECTION DETAIL PLAN

SCALE 1" = 1'-0"

*NOTE:
LIFTING POINTS SHALL BE DESIGNED BY FABRICATOR AND SUBMITTED WITH CALCULATIONS

NF = NEAR FACE
FF = FAR FACE
EF = EACH FACE
3" CLEAR, UNLESS OTHERWISE SPECIFIED ON THE PLANS.
2'-7" BAR LAP UNLESS OTHERWISE SPECIFIED ON THE PLANS.

SPECIAL PROVISION (HIGH PERFORMANCE CONCRETE, RAPID SET)
REINFORCING IN THE CLOSURE POUR WILL BE PAID UNDER ITEM 507.13 REINFORCING STEEL, LEVEL III (FPQ)

PROJECT NAME: WOODSTOCK VILLAGE	
PROJECT NUMBER: BF 020-2(43)	
FILE NAME: s13j280appslab.dgn	PLOT DATE: 11-APR-2017
PROJECT LEADER: R. YOUNG	DRAWN BY: S. COLEY
DESIGNED BY: S. COLEY	CHECKED BY: W. LAMMER
APPROACH SLAB 2	SHEET 38 OF 51

STATE OF VERMONT
AGENCY OF TRANSPORTATION

REINFORCING STEEL SCHEDULE

ITEM	EACH	SIZE	LENGTH	MARK	TYPE	A	B	C	D	E	F	G	H	J	K	R	O
Right Bridge Sidewalk																	
	62	4	6'- 5"	ES401	S5	0'- 0"	2'- 4"	1'- 2"	2'- 4"			0'- 8"					
	10	5	25'- 0"		STR												
	10	5	22'- 11"		STR												
	55	5	7'- 7"		STR												
Left Bridge Sidewalk																	
	43	4	6'- 6"	ES401	S5	0'- 0"	2'- 4"	1'- 2"	2'- 4"			0'- 8"					
	11	5	25'- 0"		STR												
	11	5	9'- 3"		STR												
	43	5	9'- 0"		STR												
BRIDGE SEAT 1																	
	12	5	3'- 0"	1A501	S10		0'- 9"	1'- 6"	0'- 9"								
	10	5	4'- 0"	1A502	S10		1'- 0"	2'- 0"	1'- 0"								
	21	5	3'- 9"	1A503	S10		0'- 9"	2'- 0"	1'- 0"								
	31	5	3'- 7"	1A504	S10		0'- 7"	2'- 0"	1'- 0"								
	3	5	2'- 8"	1A505	S10		0'- 7"	1'- 6"	0'- 7"								
	1	5	3'- 2"	1A506	S10		0'- 9"	1'- 8"	0'- 9"								
	1	5	3'- 9"	1A507	S10		0'- 9"	2'- 3"	0'- 9"								
	1	5	4'- 6"	1A508	S10		0'- 9"	3'- 0"	0'- 9"								
	5	5	4'- 4"	1A509	19		2'- 2"	2'- 2"					0'- 7"		2'- 1"		
	2	5	13'- 11"		STR												
	1	5	34'- 6"		STR												
	2	5	33'- 4"		STR												
	2	5	21'- 6"		STR												
	2	5	37'- 9"		STR												
	1	5	13'- 3"		STR												
	1	5	41'- 5"		STR												
	2	5	30'- 0"		STR												
	1	5	25'- 2"		STR												
	1	5	24'- 2"		STR												
	10	5	2'- 0"		STR												
	34	5	1'- 9"		STR												
	34	5	1'- 7"		STR												
	16	5	1'- 6"		STR												
	4	5	1'- 3"		STR												
	27	8	2'- 0"		STR												
BRIDGE SEAT 2																	
	10	5	3'- 0"	1A501	S10		0'- 9"	1'- 6"	0'- 9"								
	48	5	3'- 9"	1A503	S10		0'- 9"	2'- 0"	1'- 0"								
	4	5	3'- 6"	2A501	S10		1'- 0"	1'- 6"	1'- 0"								
	3	5	4'- 0"	1A502	S10		1'- 0"	2'- 0"	1'- 0"								
	1	5	3'- 2"	1A506	S10		0'- 9"	1'- 8"	0'- 9"								
	1	5	3'- 9"	1A507	S10		0'- 9"	2'- 3"	0'- 9"								
	5	5	4'- 4"	2A502	19		2'- 2"	2'- 2"					0'- 4"		2'- 2"		
	12	5	1'- 3"		STR												
	13	5	1'- 6"		STR												
	57	5	1'- 9"		STR												
	7	5	2'- 0"		STR												
	2	5	12'- 4"		STR												
	1	5	11'- 6"		STR												
	2	5	10'- 8"		STR												
	1	5	12'- 0"		STR												
	5	5	40'- 0"		STR												
	1	5	12'- 8"		STR												
	1	5	25'- 2"		STR												
	1	5	25'- 10"		STR												
	2	5	11'- 10"		STR												
	24	8	2'- 0"		STR												
RETAINING WALL																	
	25	5	2'- 7"	1R501	S10		0'- 9"	1'- 1"	0'- 9"								
	38	5	4'- 1"	1R502	S10		1'- 10"	0'- 5"	1'- 10"								
	1	5	2'- 8"	1R503	S10		0'- 9"	1'- 2"	0'- 9"								
	1	5	3'- 3"	1R504	S10		0'- 9"	1'- 9"	0'- 9"								
	26	5	1'- 9"														
	2	5	24'- 8"														
	1	5	25'- 7"														
	2	5	26'- 6"														
WINGWALL 3																	
	20	5	2'- 7"	3W501	S10		0'- 9"	1'- 1"	0'- 9"								
	31	5	4'- 1"	3W502	S10		1'- 10"	0'- 5"	1'- 10"								
	2	5	3'- 0"	3W503	S10		0'- 9"	1'- 6"	0'- 9"								
	21	5	1'- 9"														
	2	5	19'- 0"														
	1	5	20'- 1"														
	2	5	21'- 3"														
APPROACH SLAB JOINTS																	
	20	5	11'- 0"														
	16	5	13'- 6"														
	2	5	10'- 11"														
	2	5	11'- 2"														

ITEM	EACH	SIZE	LENGTH	MARK	TYPE	A	B	C	D	E	F	G	H	J	K	R	O
SOLID SLAB JOINTS																	
	4	5	33'- 8"														
	4	5	31'- 1"														
	4	5	34'- 6"														
	4	5	35'- 0"														
	4	5	35'- 5"														
	4	5	35'- 10"														
	4	5	36'- 4"														
	4	5	36'- 9"														
	4	5	37'- 2"														
	4	5	38'- 11"														
	4	5	42'- 0"														
	4	5	45'- 1"														
	4	5	47'- 4"														

~ NOTES ~

1. UNLESS OTHERWISE DESIGNATED, ALL BAR REINFORCEMENT FOR CONCRETE IN SIZES UP TO AND INCLUDING NO. 18 SHALL CONFORM TO THE REQUIREMENTS OF THE "SPECIFICATIONS FOR DEFORMED BILLET-STEEL BARS FOR CONCRETE REINFORCEMENT", AASHTO M 31 (ASTM A 615-SI). ALL BARS SHALL BE GRADE 60, UNLESS OTHERWISE DESIGNATED.
2. FOR TYPICAL BENDING DETAILS, RECOMMENDED PIN DIAMETER "D" OF BENDS AND HOOKS, AND OTHER STANDARD PRACTICE, SEE CURRENT CONCRETE REINFORCING STEEL INSTITUTE "MANUAL OF STANDARD PRACTICE".
3. BARS WHICH REQUIRE MORE ACCURATE BENDING THAN STANDARD PRACTICES SHOULD HAVE LIMITS INDICATED.
4. ALL DIMENSIONS ARE OUT TO OUT OF BAR EXCEPT "A" AND "G" ON STANDARD 180 DEGREE AND 135 DEGREE HOOKS.
5. "J" DIMENSION ON 180 DEGREE HOOKS TO BE SHOWN ONLY WHERE NECESSARY TO RESTRICT HOOK SIZE. OTHERWISE, STANDARD HOOKS ARE TO BE USED.
6. "H" DIMENSION ON STIRRUPS TO BE SHOWN ONLY WHEN NECESSARY TO MAINTAIN CLEARANCES.
7. WHERE SLOPE DIFFERS FROM 45 DEGREES, DIMENSIONS "H" AND "K" MUST BE SHOWN.
8. ▲ DENOTES BARS TO BE CUT IN FIELD.
9. ✳ DENOTES ONE EXTRA BAR ADDED FOR TESTING PURPOSES.
10. △ DENOTES TWO EXTRA BARS ADDED FOR TESTING PURPOSES.
11. E IN BAR MARK PREFIX DENOTES EPOXY COATED REINFORCING STEEL.

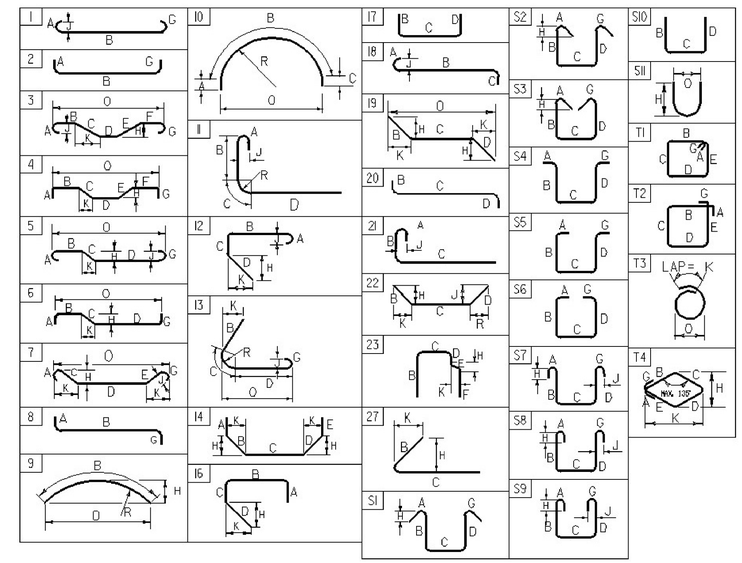

ASTM STANDARD REINFORCING BARS

BAR SIZE DESIGNATION	WEIGHT POUNDS PER FOOT	NOMINAL DIMENSIONS ROUND SECTION DIAMETER INCHES	AREA INCHES2	PERIMETER INCHES
#3	0.376	0.375	0.11	1.178
#4	0.668	0.500	0.20	1.571
#5	1.043	0.625	0.31	1.963
#6	1.502	0.750	0.44	2.356
#7	2.04	0.875	0.60	2.749
#8	2.670	1.000	0.79	3.14
#9	3.400	1.13	1.00	3.54
#10	4.3	1.270	1.27	3.990
#11	5.31	1.410	1.56	4.430
#14	7.65	1.69	2.25	5.32
#18	13.60	2.26	4.00	7.09

~ REINFORCING STEEL CORROSION RESISTANCE LEVEL ~

THE REINFORCING STEEL MARKS IN THIS SCHEDULE INDICATE THE REQUIRED BAR CORROSION RESISTANCE LEVEL. CORROSION RESISTANCE LEVEL IS DENOTED WITH A .2 FOR LEVEL TWO SUFFIX OR .3 FOR LEVEL THREE SUFFIX, .1 FOR LEVEL ONE IS TO BE OMITTED. THE BAR MATERIAL TYPE AND BAR STEEL GRADE PROVIDED FOR EACH CORROSION LEVEL WILL BE RECORDED ON THE PLAN SET PI SHEET FOR AS-BUILT RECORD PLAN ARCHIVES.

PROJECT NAME: **Woodstock Village**
PROJECT NUMBER: **BF 020-2(43)**

FILE NAME:
PROJECT MANAGER: **R. Young**
DESIGNED BY: **S. Coley**
REINFORCING STEEL SCHEDULE SHEET #1

PLOT DATE: 11-APR-2017
DRAWN BY: **S. Coley**
CHECKED BY:
SHEET OF

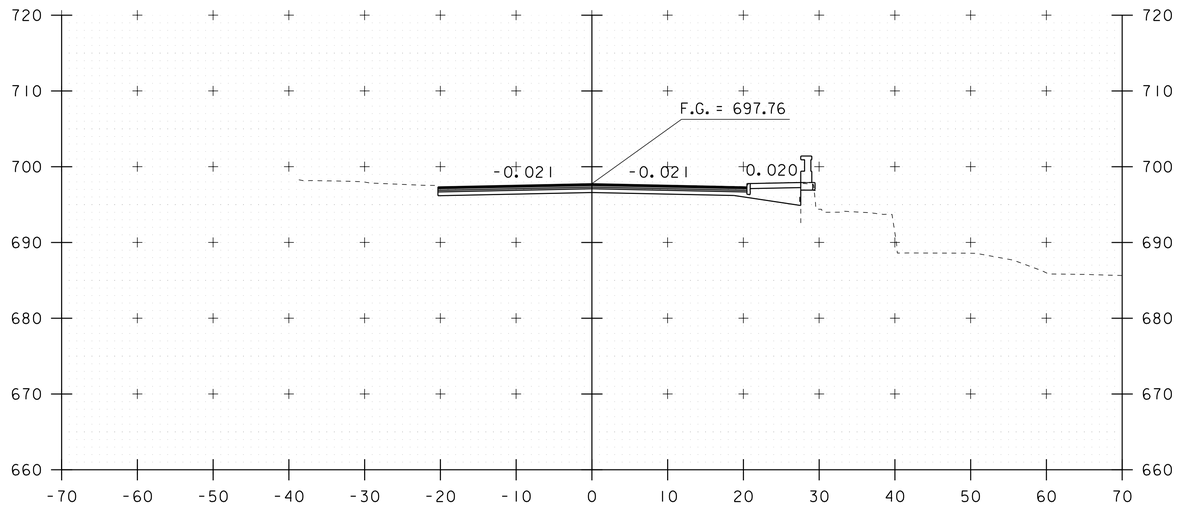

334+00

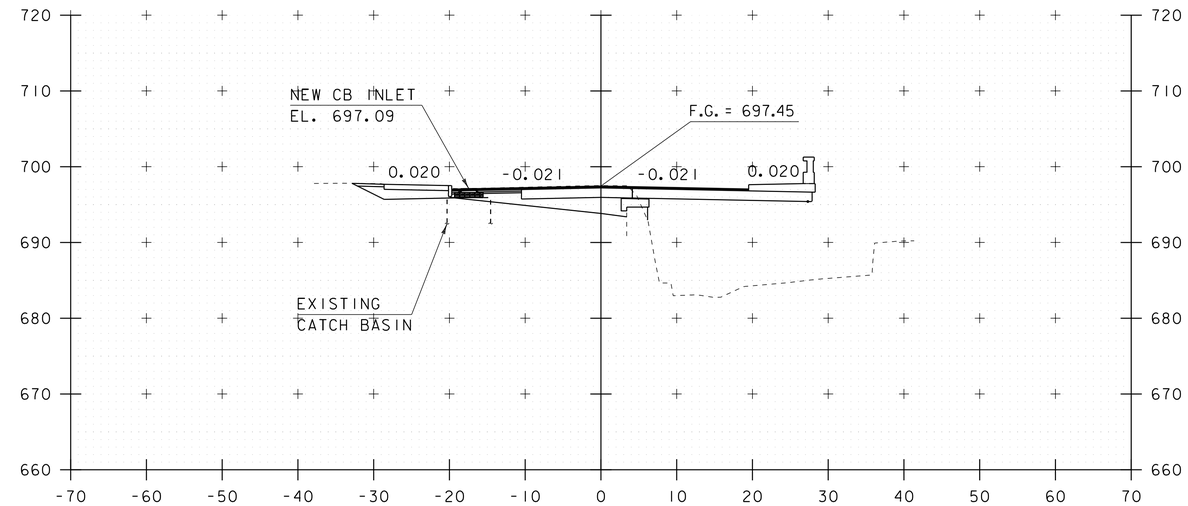

334+50
STA 334+54.05
BEGIN PROJECT/BRIDGE

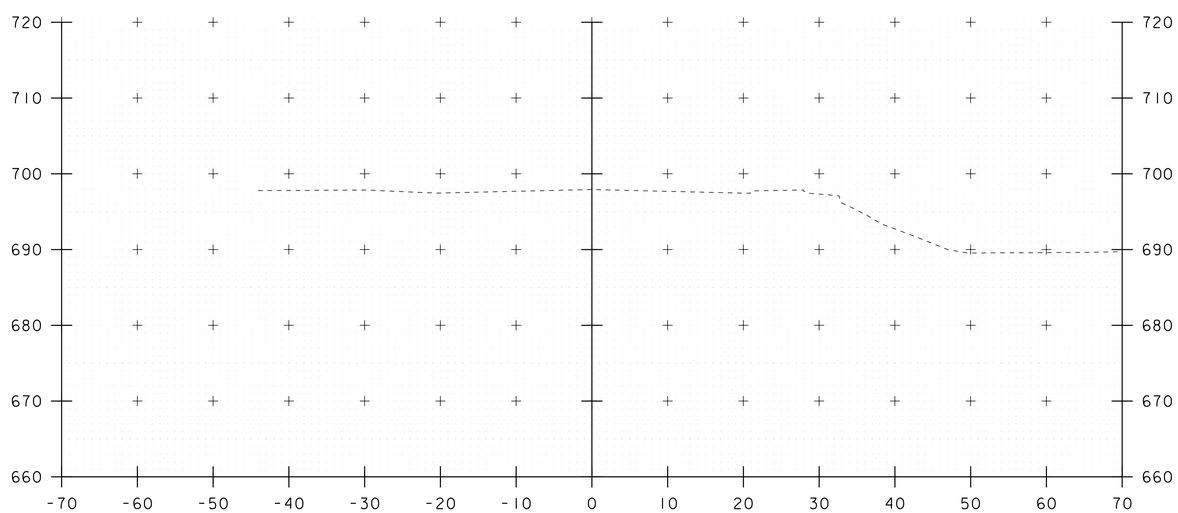

333+75
STA 333+90.00 MATCH EXISTING
BEGIN APPROACH

MATCH INTO EXISTING
SIDEWALK STA 333+88.6 RT

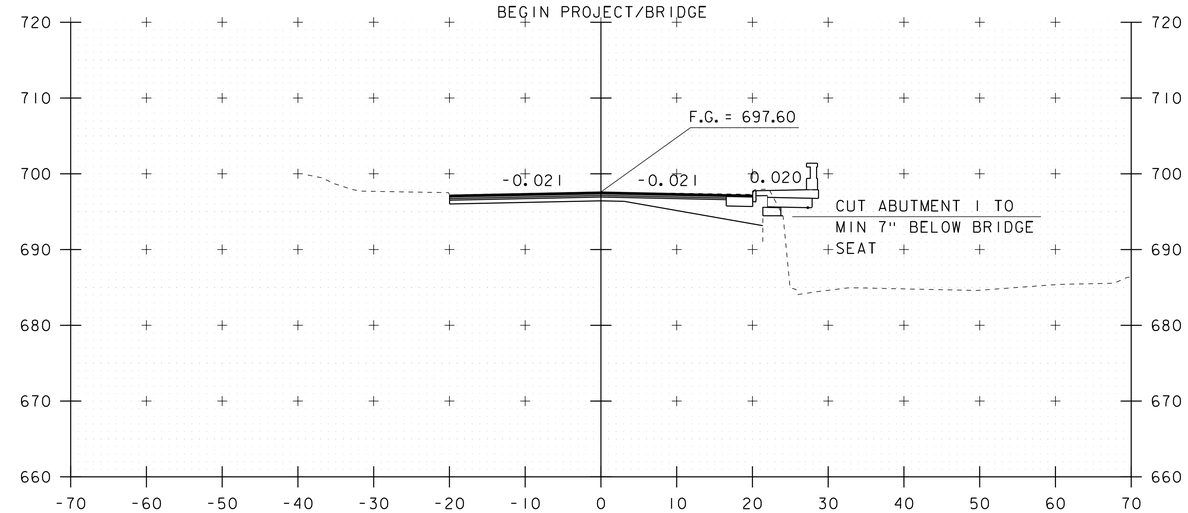

MATCH INTO EXISTING
SIDEWALK STA 334+39.0 LT

334+25

STA. 333+75 TO STA. 334+50

PROJECT NAME: WOODSTOCK VILLAGE	
PROJECT NUMBER: BF 020-2(43)	
FILE NAME: sl3j280xs.dgn	PLOT DATE: 11-APR-2017
PROJECT LEADER: R. YOUNG	DRAWN BY: S. COLEY
DESIGNED BY: S. COLEY	CHECKED BY: W. LAMMER
MAINLINE CROSS SECTIONS 1	SHEET 40 OF 51

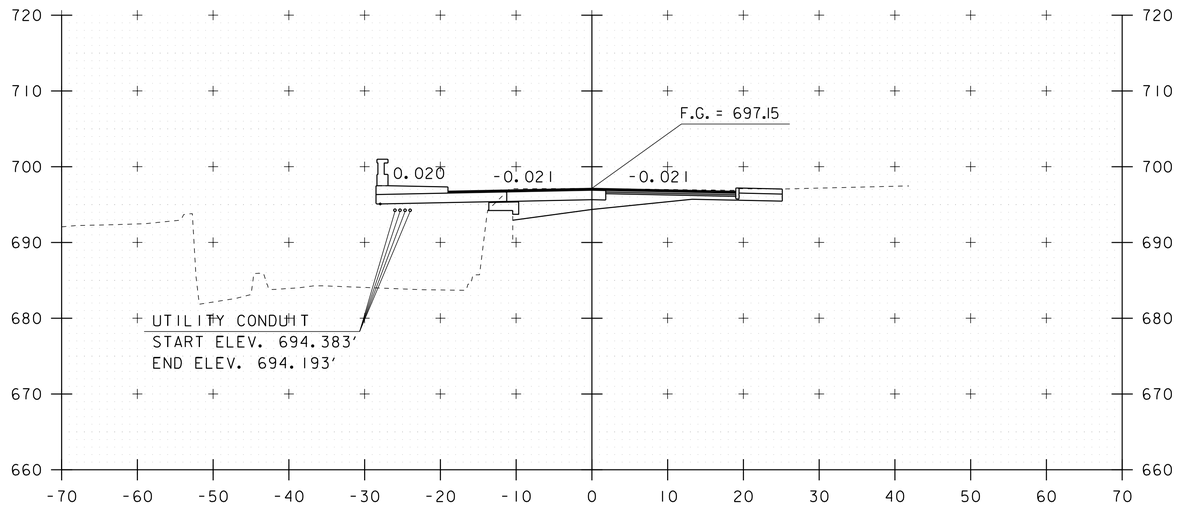

335+00

MATCH INTO EXISTING
SIDEWALK STA 335+05.0 RT

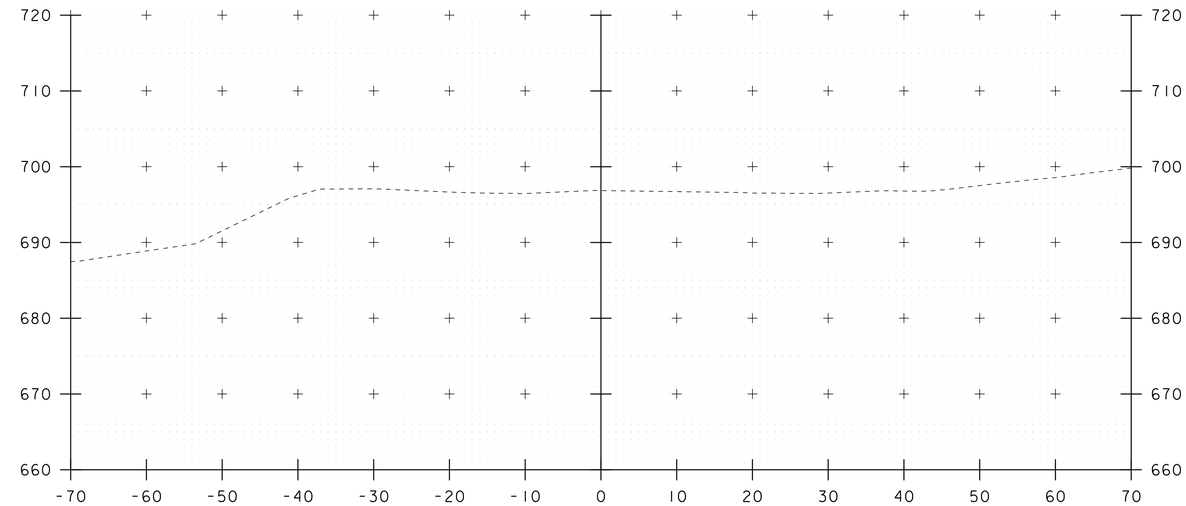

335+50

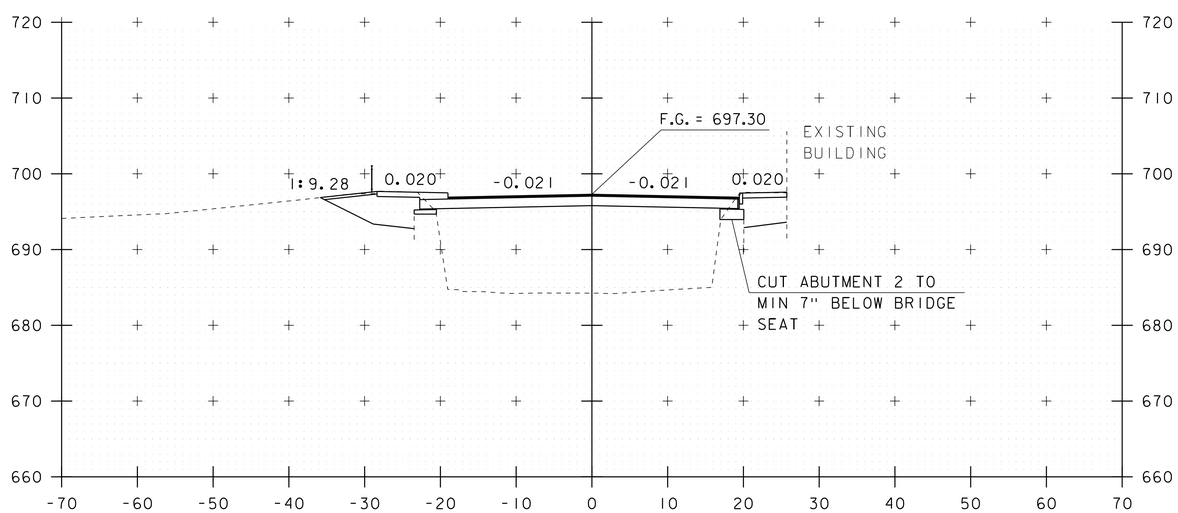

334+75
STA 334+90.14
END BRIDGE/PROJECT

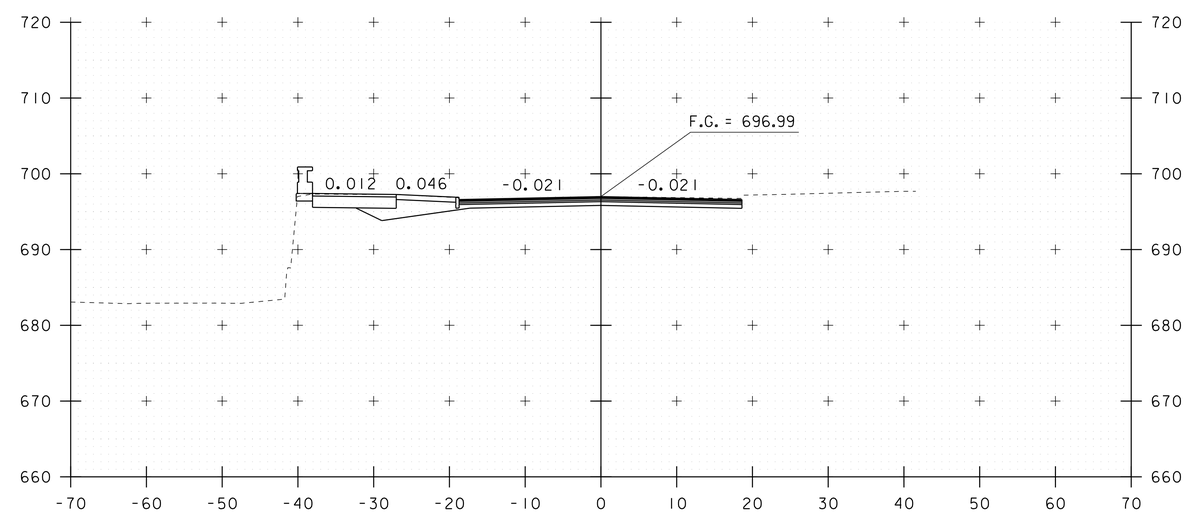

MATCH INTO EXISTING
SIDEWALK STA 335+35.4 LT

335+25
STA 335+40.00 MATCH EXISTING
END APPROACH

STA. 334+75 TO STA. 335+50

PROJECT NAME: WOODSTOCK VILLAGE	
PROJECT NUMBER: BF 020-2(43)	
FILE NAME: sl3j280xs.dgn	PLOT DATE: 11-APR-2017
PROJECT LEADER: R. YOUNG	DRAWN BY: S. COLEY
DESIGNED BY: S. COLEY	CHECKED BY: W. LAMMER
MAINLINE CROSS SECTIONS 2	SHEET 41 OF 51

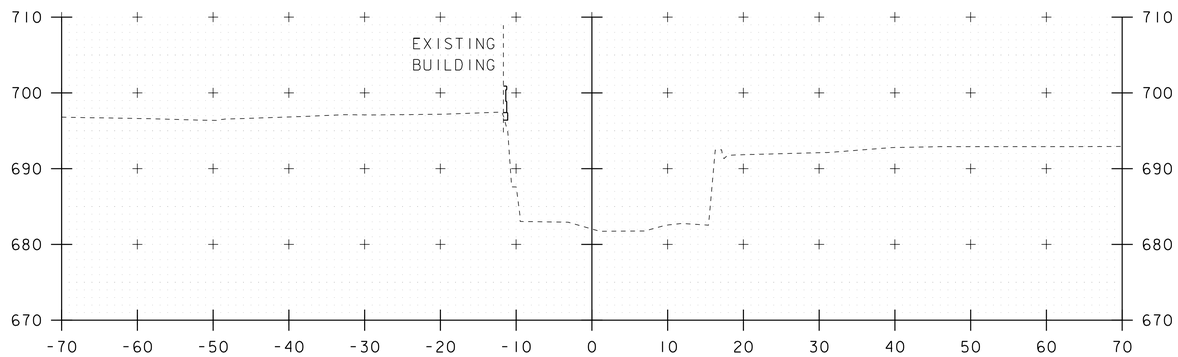

50+30

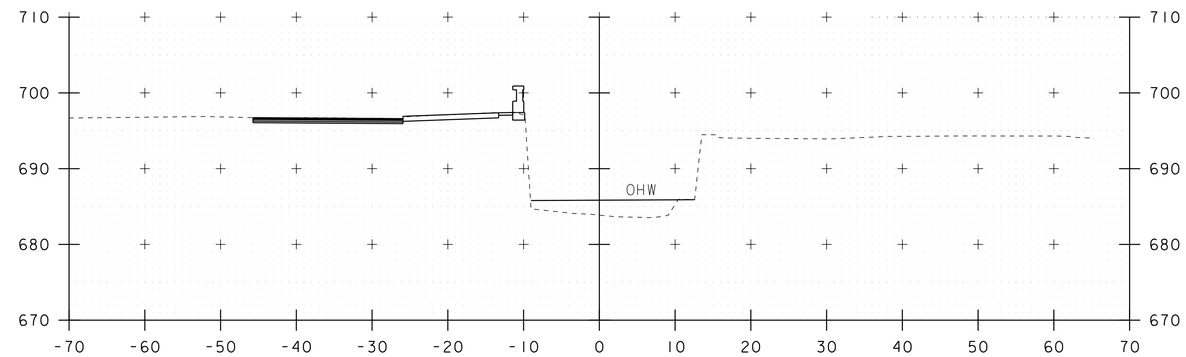

50+50

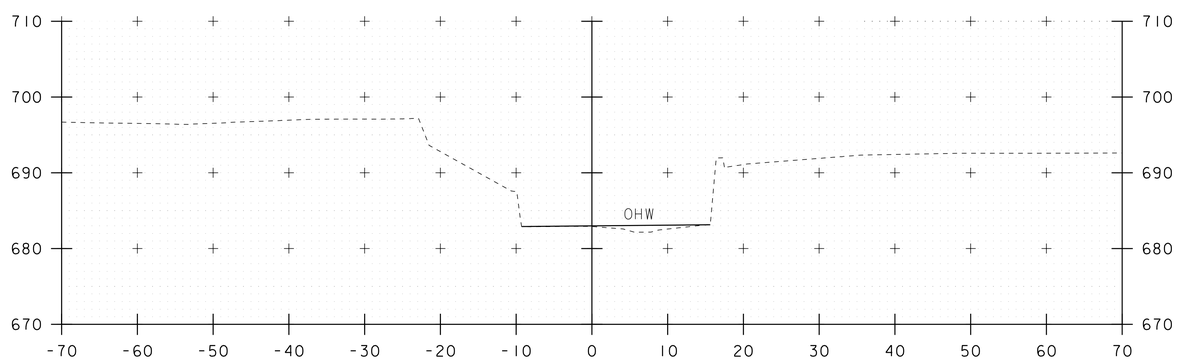

50+25

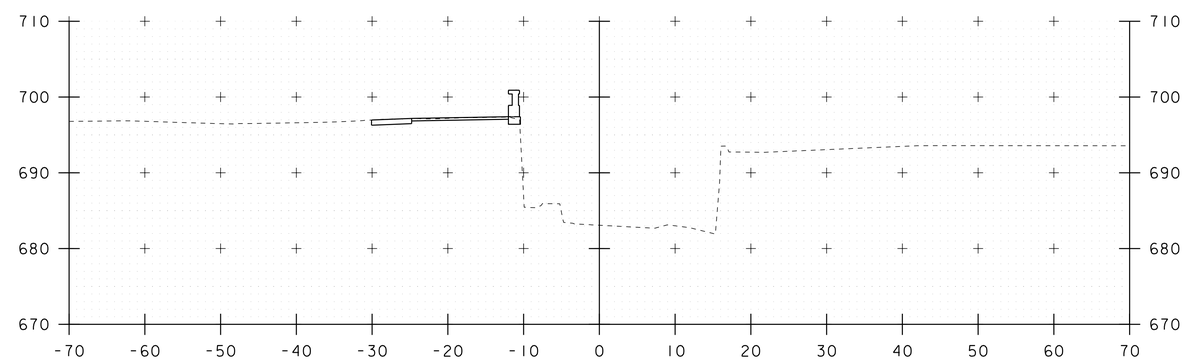

50+40

STA. 50+25 TO STA. 50+50

PROJECT NAME: WOODSTOCK VILLAGE	
PROJECT NUMBER: BF 020-2(43)	
FILE NAME: sl3j280xs.dgn	PLOT DATE: 11-APR-2017
PROJECT LEADER: R. YOUNG	DRAWN BY: S. COLEY
DESIGNED BY: S. COLEY	CHECKED BY: W. LAMMER
CHANNEL CROSS SECTIONS 1	SHEET 42 OF 51

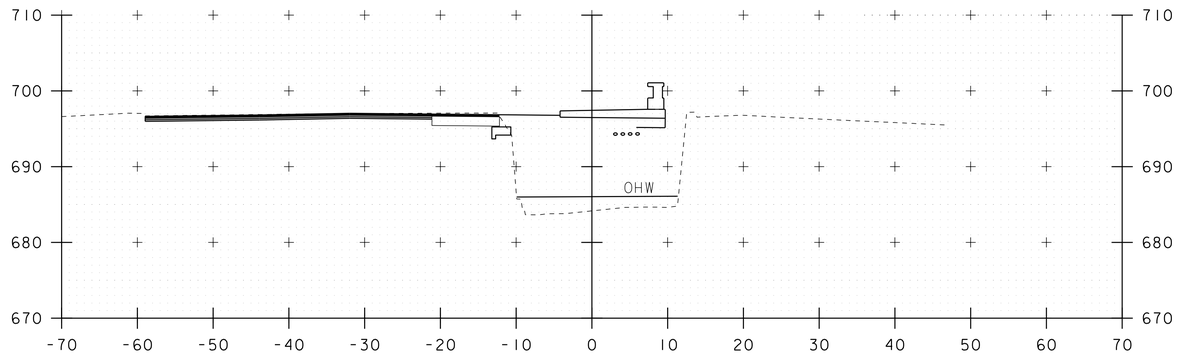

50+70

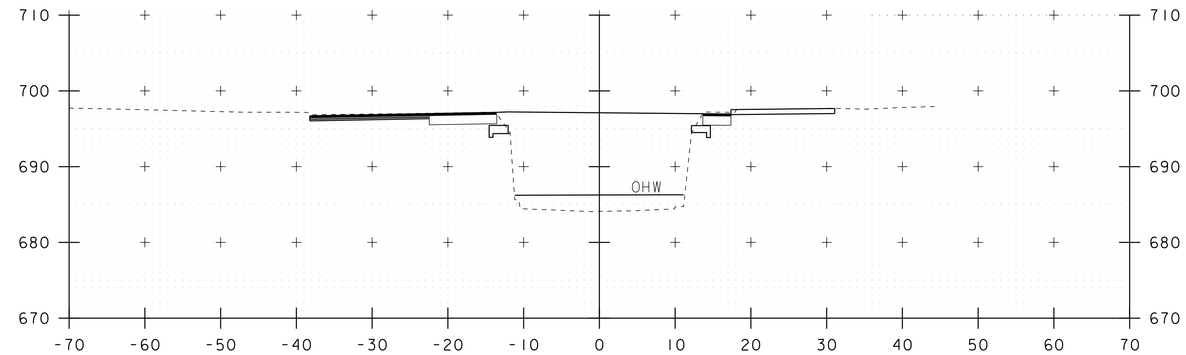

50+90

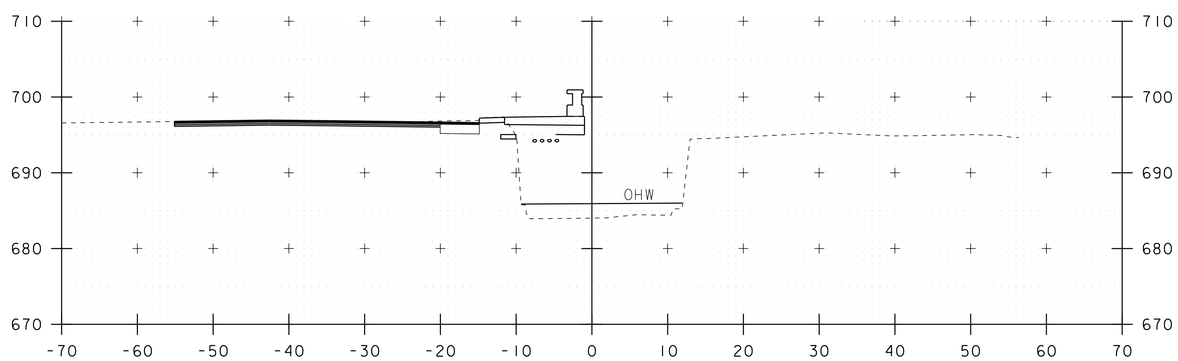

50+60

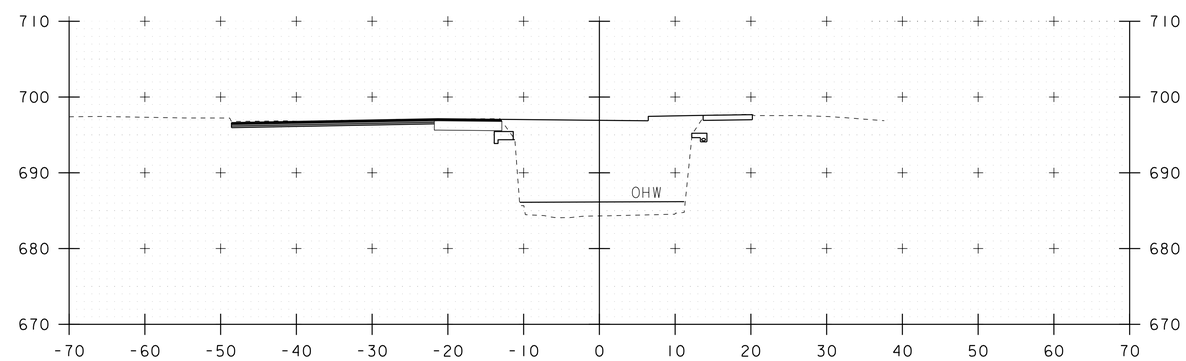

50+80

STA. 50+60 TO STA. 50+90

PROJECT NAME: WOODSTOCK VILLAGE	
PROJECT NUMBER: BF 020-2(43)	
FILE NAME: sl3j280xs.dgn	PLOT DATE: 11-APR-2017
PROJECT LEADER: R. YOUNG	DRAWN BY: S. COLEY
DESIGNED BY: S. COLEY	CHECKED BY: W. LAMMER
CHANNEL CROSS SECTIONS 2	SHEET 43 OF 51

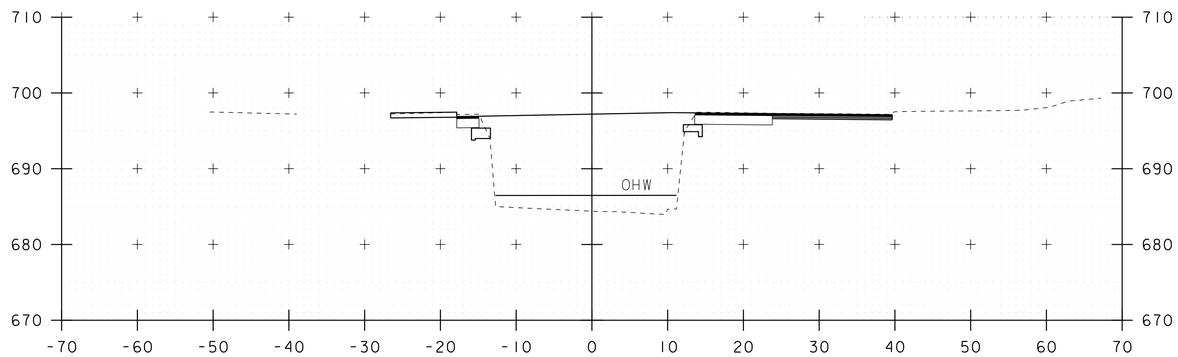

51+10

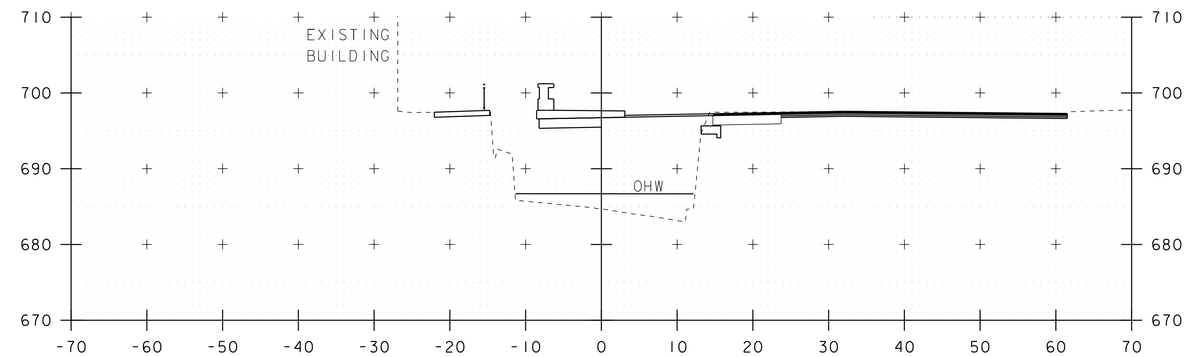

51+30

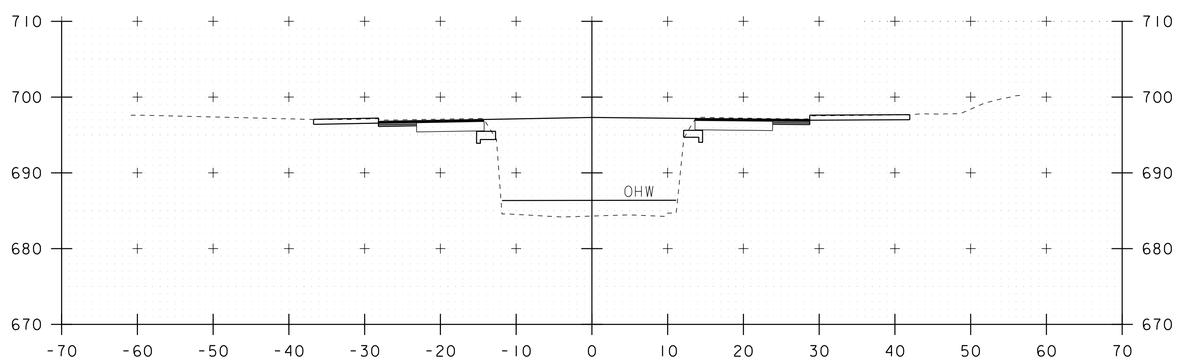

51+00

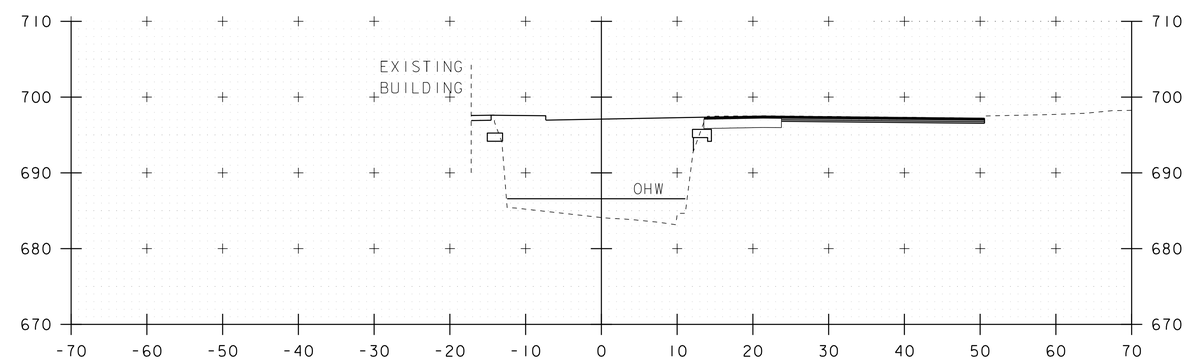

51+20

STA. 51+00 TO STA. 51+30

PROJECT NAME: WOODSTOCK VILLAGE	
PROJECT NUMBER: BF 020-2(43)	
FILE NAME: sl3j280xs.dgn	PLOT DATE: 11-APR-2017
PROJECT LEADER: R. YOUNG	DRAWN BY: S. COLEY
DESIGNED BY: S. COLEY	CHECKED BY: W. LAMMER
CHANNEL CROSS SECTIONS 3	SHEET 44 OF 51

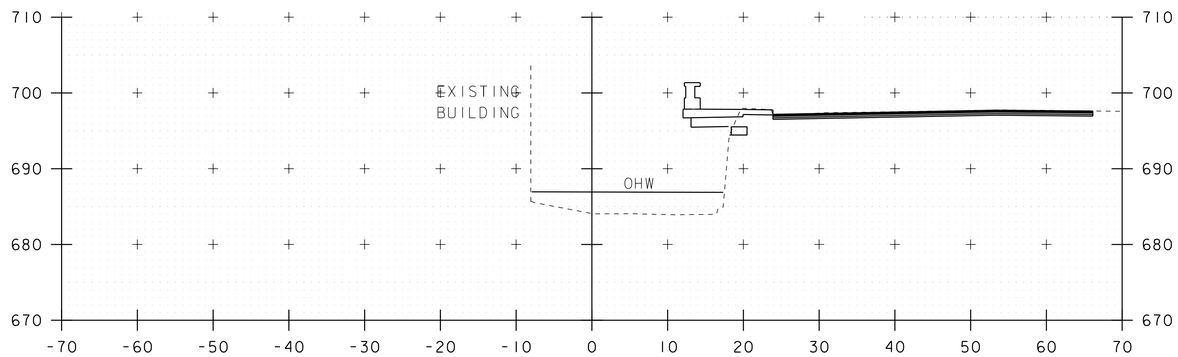

51+50

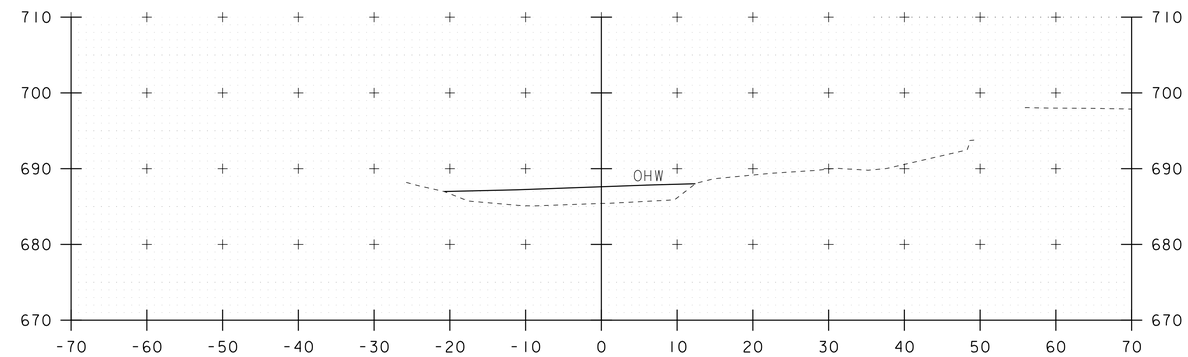

52+00

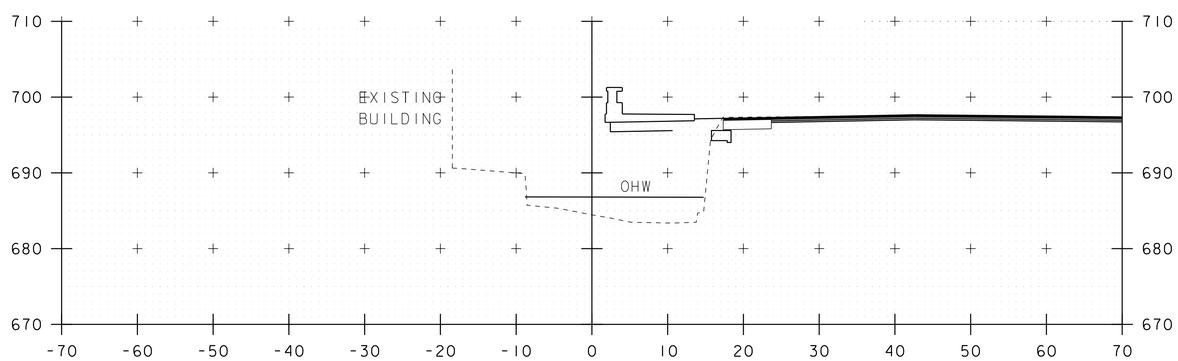

51+40

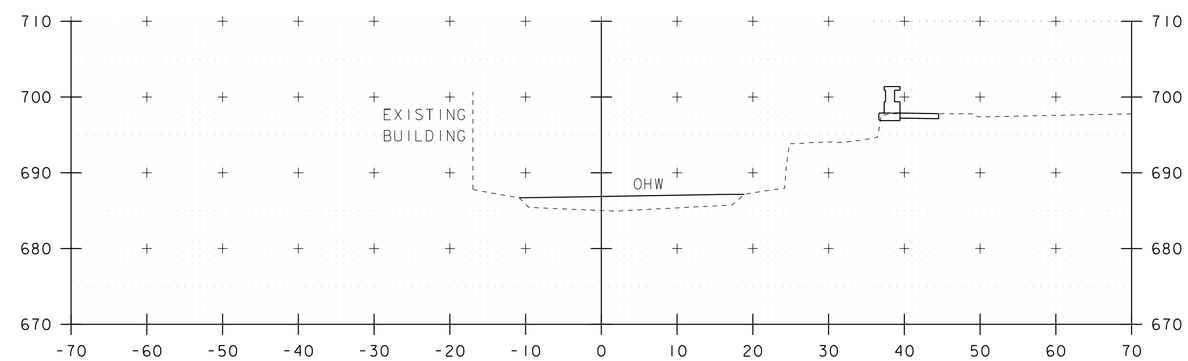

51+75

STA. 51+40 TO STA. 52+00

PROJECT NAME: WOODSTOCK VILLAGE	
PROJECT NUMBER: BF 020-2(43)	
FILE NAME: sl3j280xs.dgn	PLOT DATE: 11-APR-2017
PROJECT LEADER: R. YOUNG	DRAWN BY: S. COLEY
DESIGNED BY: S. COLEY	CHECKED BY: W. LAMMER
CHANNEL CROSS SECTIONS 4	SHEET 45 OF 51

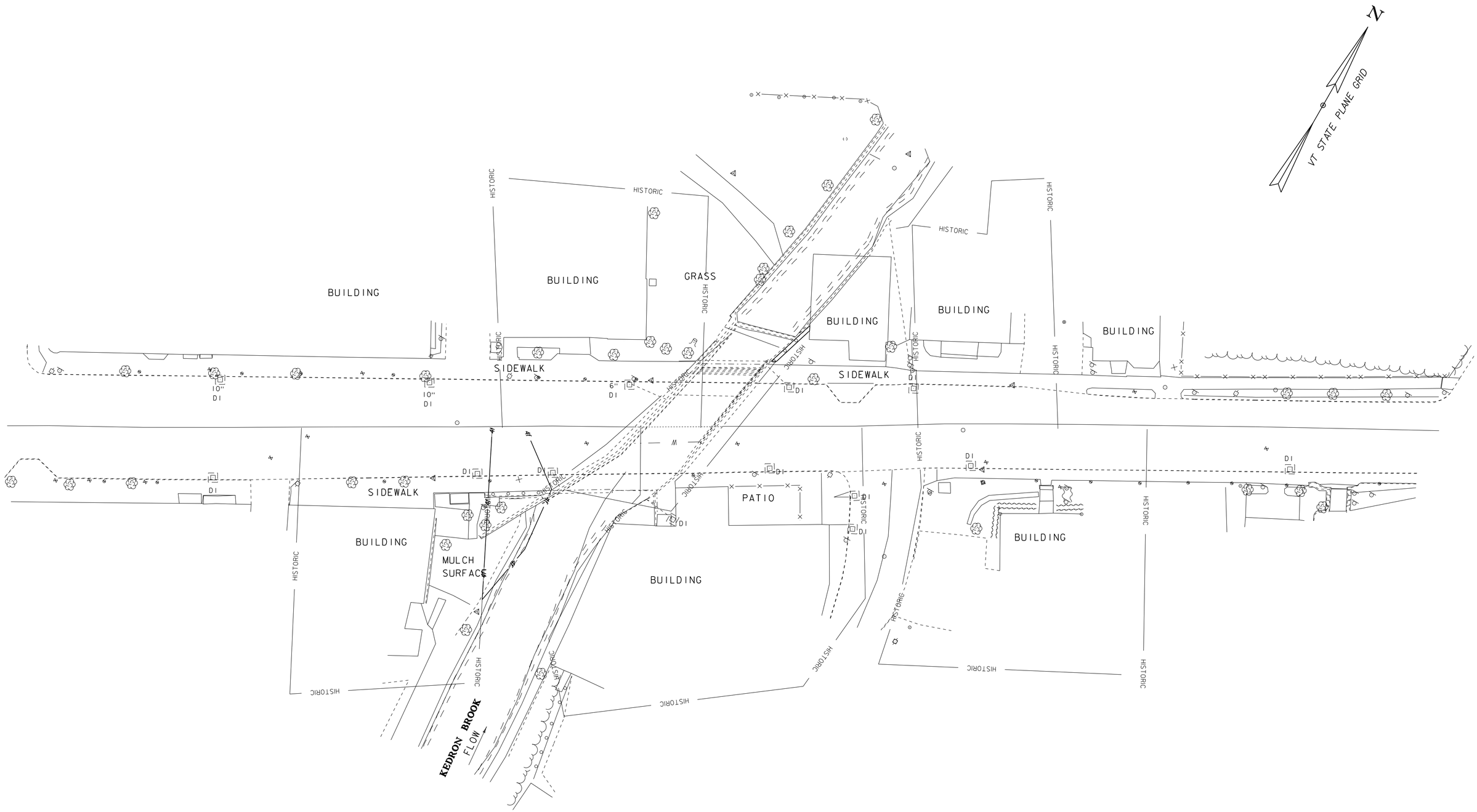

EPSC EXISTING SITE PLAN

SCALE 1" = 20'-0"

20 0 20

NOTES:
THERE ARE NO ANTICIPATED IMPACTS OR FILL BELOW THE ORDINARY HIGH WATER LINE

PROJECT NAME: WOODSTOCK VILLAGE	
PROJECT NUMBER: BF 020 - 2(43)	
FILE NAME: sl3j280bdr_ero	PLOT DATE: 11-APR-2017
PROJECT LEADER: R. YOUNG	DRAWN BY: S. COLEY
DESIGNED BY: S. COLEY	CHECKED BY: W. LAMMER
EPSC EXISTING SITE PLAN	SHEET 46 OF 51

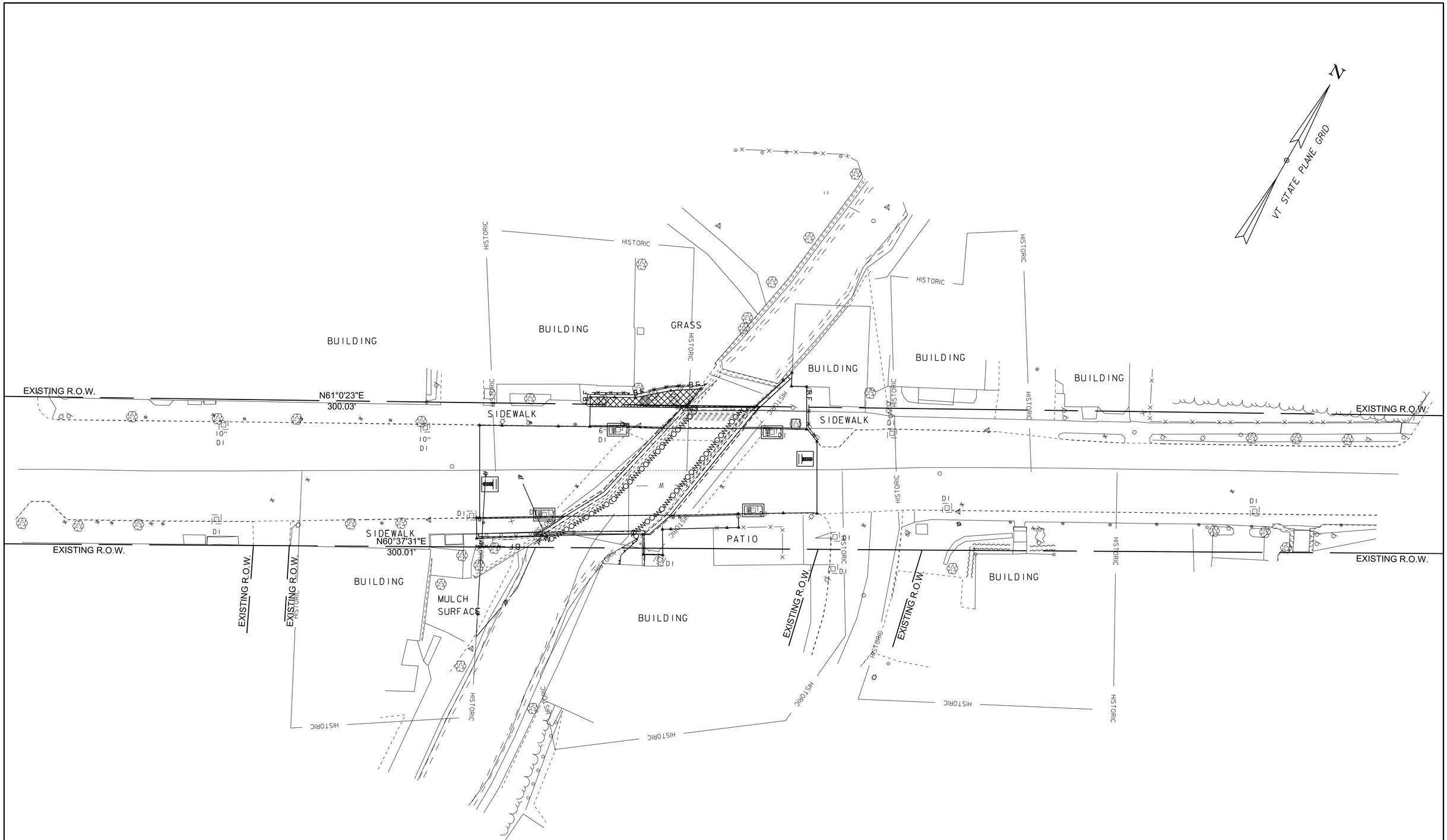

EPSC PLAN

SCALE 1" = 20'-0"

20 0 20

NOTES:

THERE ARE NO ANTICIPATED IMPACTS OR FILL BELOW THE ORDINARY HIGH WATER LINE

PROJECT NAME: WOODSTOCK VILLAGE	
PROJECT NUMBER: BF 020-2(43)	
FILE NAME: sl3j280bdr_ero	PLOT DATE: 11-APR-2017
PROJECT LEADER: R. YOUNG	DRAWN BY: S. COLEY
DESIGNED BY: S. COLEY	CHECKED BY: W. LAMMER
EPSC PLAN	SHEET 47 OF 51

SYMBOL

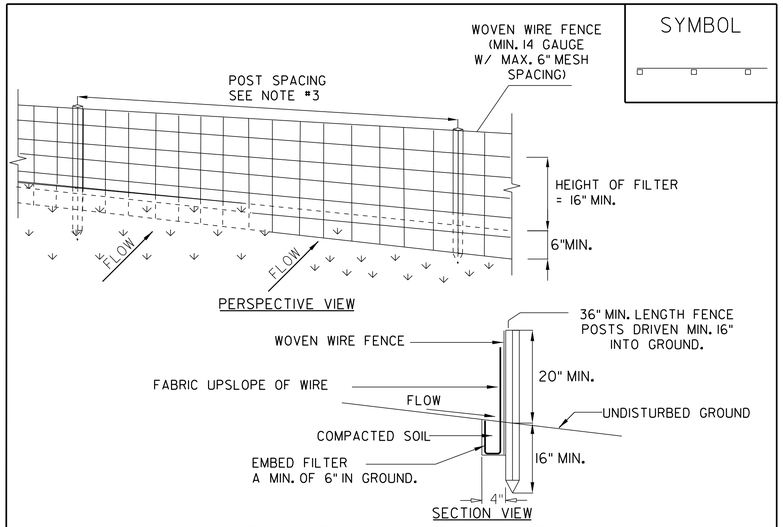

CONSTRUCTION SPECIFICATIONS

1. WOVEN WIRE FENCE REINFORCEMENT IS ONLY REQUIRED WITHIN 100 FT UPSLOPE OF RECEIVING WATERS.

2. WHERE REQUIRED FENCE SHALL BE WOVEN WIRE, MIN. 14 GAUGE WITH A 6" MAXIMUM MESH OPENING. FILTER CLOTH SHALL BE EITHER FILTER X, MIRAFI100X, STABILINKA T140N OR APPROVED EQUIVALENT.

3. POST SPACING FOR WIRE-BACKED FENCE SHALL BE 10' MAXIMUM. FOR FILTER-CLOTH FENCE, WHEN ELONGATION IS >50%, POST SPACING SHALL NOT EXCEED 4'. FOR FILTER-CLOTH FENCE, WHEN ELONGATION IS <50%, POST SPACING SHALL NOT EXCEED 6'.

4. WOVEN WIRE FENCE IS TO BE FASTENED SECURELY TO FENCE POSTS WITH WIRE TIES. FILTER CLOTH IS TO BE FASTENED SECURELY TO WOVEN WIRE FENCE WITH TIES SPACED EVERY 24" AT TOP AND MID SECTION.

5. WHEN TWO SECTIONS OF FILTER CLOTH ADJOIN EACH OTHER THEY SHALL BE OVER-LAPPED BY SIX INCHES AND FOLDED.

6. PREFABRICATED UNITS SHALL BE GEOFAB, ENVIROFENCE, OR APPROVED EQUIVALENT.

7. MAINTENANCE SHALL BE PERFORMED AS NEEDED AND MATERIAL REMOVED WHEN SEDIMENT REACHES HALF OF FABRIC HEIGHT.

ADAPTED FROM DETAILS PROVIDED BY: NEW YORK STATE DEC
ORIGINALLY DEVELOPED BY USDA-NRCS
VERMONT DEPARTMENT OF ENVIRONMENTAL CONSERVATION

SILT FENCE

NOTES:
REFER TO "THE VERMONT STANDARDS & SPECIFICATIONS FOR EROSION PREVENTION & SEDIMENT CONTROL -2006- "FROM THE VT AGENCY OF NATURAL RESOURCES FOR ADDITIONAL GUIDANCE.

THIS ITEM SHALL BE PAID FOR UNDER ITEM
649.51 GEOTEXTILE FOR SILT FENCE OR
649.515 GEOTEXTILE FOR SILT FENCE, WOVEN WIRE REINFORCED

SYMBOL

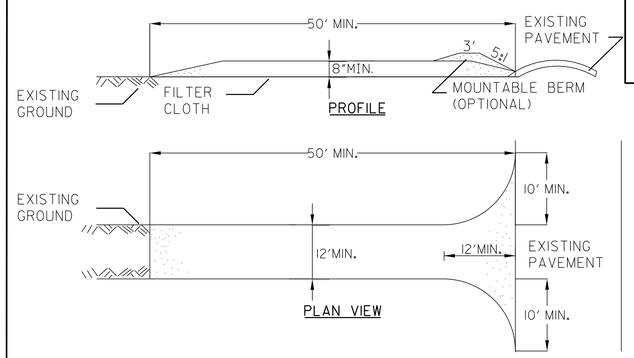

CONSTRUCTION SPECIFICATIONS

1. STONE SIZE - USE 1-4" STONE, OR RECLAIMED OR RECYCLED CONCRETE EQUIVALENT.
2. LENGTH - NOT LESS THAN 50 FEET (EXCEPT ON A SINGLE RESIDENCE LOT WHERE A 30 FOOT MINIMUM LENGTH APPLIES).
3. THICKNESS - NOT LESS THAN EIGHT (8) INCHES.
4. WIDTH - TWELVE (12) FOOT MINIMUM, BUT NOT LESS THAN THE FULL WIDTH AT POINTS WHERE INGRESS OR EGRESS OCCURS. TWENTY-FOUR (24) FOOT IF SINGLE ENTRANCE TO SITE.
5. GEOTEXTILE MUST BE PLACED OVER THE ENTIRE AREA PRIOR TO PLACING STONE.
6. SURFACE WATER - ALL SURFACE WATER FLOWING OR DIVERTED TOWARD CONSTRUCTION ENTRANCES SHALL BE PIPED BENEATH THE ENTRANCE. IF PIPING IS IMPRACTICAL, A MOUNTABLE BERM WITH 5:1 SLOPES WILL BE PERMITTED.
7. MAINTENANCE - THE ENTRANCE SHALL BE MAINTAINED IN A CONDITION WHICH WILL PREVENT TRACKING OR FLOWING OF SEDIMENT ONTO PUBLIC RIGHTS-OF-WAY, ALL SEDIMENT SPILLED, DROPPED, WASHED OR TRACKED ONTO PUBLIC RIGHTS-OF-WAY MUST BE REMOVED IMMEDIATELY.
8. WHEN WASHING IS REQUIRED, IT SHALL BE DONE ON AN AREA STABILIZED WITH STONE AND WHICH DRAINS INTO AN APPROVED SEDIMENT TRAPPING DEVICE.
9. PERIODIC INSPECTION AND NEEDED MAINTENANCE SHALL BE PROVIDED ACCORDING TO PERMIT REQUIREMENTS.

ADAPTED FROM DETAILS PROVIDED BY: NEW YORK STATE DEC
ORIGINALLY DEVELOPED BY USDA-NRCS
VERMONT DEPARTMENT OF ENVIRONMENTAL CONSERVATION

STABILIZED CONSTRUCTION ENTRANCE

NOTES:
REFER TO "THE VERMONT STANDARDS & SPECIFICATIONS FOR EROSION PREVENTION & SEDIMENT CONTROL -2006- "FROM THE VT AGENCY OF NATURAL RESOURCES FOR ADDITIONAL GUIDANCE.

THIS ITEM SHALL BE PAID FOR UNDER ITEM
653.35 VEHICLE TRACKING PAD

REVISIONS	
FEBRUARY 9, 2007	WHF
MARCH 8, 2007	JMF

SYMBOL

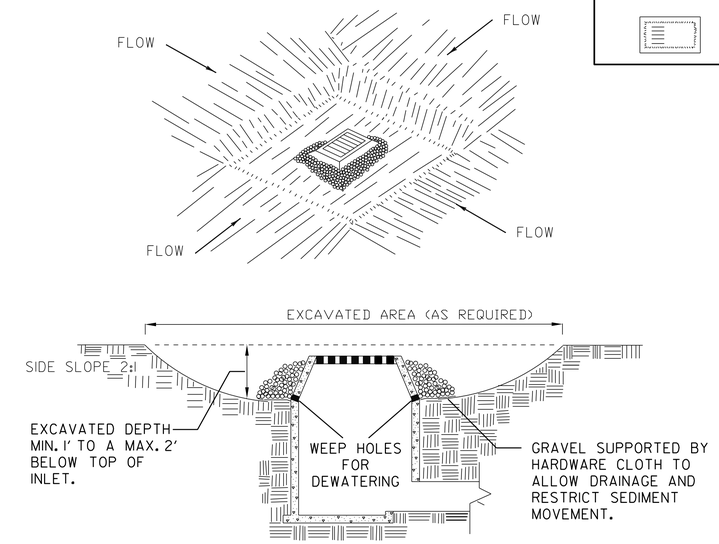

CONSTRUCTION SPECIFICATIONS

1. CLEAR THE AREA OF ALL DEBRIS THAT WILL HINDER EXCAVATION.
2. GRADE APPROACH TO THE INLET UNIFORMLY AROUND THE BASIN.
3. WEEP HOLES SHALL BE PROTECTED BY GRAVEL.
4. UPON STABILIZATION OF CONTRIBUTING DRAINAGE AREA, SEAL WEEP HOLES, FILL BASIN WITH STABLE SOIL TO FINAL GRADE, COMPACT IT PROPERLY AND STABILIZE WITH PERMANENT SEEDING.

MAXIMUM DRAINAGE AREA 1 ACRE

ADAPTED FROM DETAILS PROVIDED BY: NEW YORK STATE DEC
ORIGINALLY DEVELOPED BY USDA-NRCS
VERMONT DEPARTMENT OF ENVIRONMENTAL CONSERVATION

EXCAVATED DROP INLET PROTECTION

NOTES:
REFER TO "THE VERMONT STANDARDS & SPECIFICATIONS FOR EROSION PREVENTION & SEDIMENT CONTROL -2006- "FROM THE VT AGENCY OF NATURAL RESOURCES FOR ADDITIONAL GUIDANCE.

THIS ITEM SHALL BE PAID FOR UNDER ITEM
653.40 INLET PROTECTION DEVICE, TYPE I

PROJECT NAME: WOODSTOCK VILLAGE
PROJECT NUMBER: BF 020-2(43)

FILE NAME: s13j280epsc_det	PLOT DATE: 11-APR-2017
PROJECT LEADER: R. YOUNG	DRAWN BY: S. COLEY
DESIGNED BY: S. COLEY	CHECKED BY: W. LAMMER
EPSC DETAILS	SHEET 48 OF 51

EPSC PLAN NARRATIVE

1.1 PROJECT DESCRIPTION

THIS PROJECT INVOLVES THE SUPERSTRUCTURE REPLACEMENT OF BRIDGE 51 WITH RELATED APPROACH WORK. THE PROJECT LOCATION IS IN THE TOWN OF WOODSTOCK VILLAGE, VT ON US ROUTE 4, BEGINNING AT MILE POST 6.3360 (STA 334+53.85) AND ENDING AT MILE POST 6.3428 (STA 334+90.79).

THE NEW STRUCTURE WILL BE APPROXIMATELY 36.94 FEET IN LENGTH WITH 113.06 FEET OF ROADWAY WORK.

NOTE: AREA OF DISTURBANCE INCLUDES LIMITS OF EARTH DISTURBANCE WITHIN THE PROJECT AREA, AS WELL AS WASTE, BORROW AND STAGING AREAS, AND OTHER EARTH DISTURBING ACTIVITIES WITHIN OR DIRECTLY ADJACENT TO THE PROJECT LIMITS AS SHOWN ON THE ATTACHED EPSC PLAN.

TOTAL AREA OF DISTURBANCE AS SHOWN ON THE ATTACHED EPSC PLAN IS APPROXIMATELY 0.14 ACRES.

IT IS ANTICIPATED THAT THIS PROJECT WILL LAST ONE CONSTRUCTION SEASON.

1.2 SITE INVENTORY

1.2.1 TOPOGRAPHY

THE TOPOGRAPHY OF THE PROJECT AREA IS RELATIVELY FLAT WITH RETAINING WALLS ALONG THE UPSTREAM AND DOWNSTREAM CHANNEL. IT IS URBAN WITH BUILDINGS AT WINGWALLS 1, 3, AND 4. THERE IS A PARK LOCATED AT WINGWALL 2 THAT IS WOODED.

1.2.2 DRAINAGE, WATERWAYS, BODIES OF WATER, AND PROXIMITY TO NATURAL OR MAN-MADE WATER FEATURES

KEDRON BROOK IS THE ONLY WATER SOURCE ON THE PROJECT SITE.

THE BROOK IS CLASSIFIED AS INCISED, SINUOUS, AND ALLUVIAL AT THE SITE. THE STREAM BED CONSISTS OF GRAVEL AND COBBLES. THE DRAINAGE AREA AT THE BRIDGE CROSSING IS 16.0 SQUARE MILES.

THERE ARE 4 12" CORRUGATED METAL PIPES RUNNING FROM MANHOLES TO EACH WINGWALL PARALLEL TO US ROUTE 4.

1.2.3 VEGETATION

THE VEGETATION IN THE PROJECT AREA CONSISTS OF A COUPLE DECIDUOUS TREES AND LANDSCAPING SHRUBS. THE IMPACT TO VEGETATION WILL BE LIMITED TO THAT WHICH IS DIRECTLY AFFECTED BY REPLACEMENT OF THE EXISTING BRIDGE. DISTURBED VEGETATION WILL BE REESTABLISHED WITH STANDARD SODD, AND THE DECIDUOUS TREE WILL BE SAVED.

1.2.4 SOILS

ALL SOIL DATA CAME FROM THE U.S. DEPARTMENT OF AGRICULTURE SOIL CONSERVATION SERVICE FOR THE COUNTY OF CHITTENDEN, VERMONT.

LIMERICK SILT LOAM	0% TO 3% SLOPES	"K" FACTOR = 0.49
COLTON GRAVELLY LOAMY SAND	12% TO 20% SLOPES	"K" FACTOR = 0.17

NOTE: K-VALUES GENERALLY INDICATE THE FOLLOWING:
0.0-0.23 = LOW EROSION POTENTIAL
0.24-0.36 = MODERATE EROSION POTENTIAL
0.37 AND HIGHER = HIGH EROSION POTENTIAL

1.2.5 SENSITIVE RESOURCE AREAS

CRITICAL HABITATS: NO
HISTORICAL OR ARCHEOLOGICAL AREAS: YES – SOUTHWEST, NORTHWEST, AND SOUTHEAST OF BRIDGE, INCLUDING SECTION 4(F) SOUTHWEST OF THE BRIDGE.
PRIME AGRICULTURAL LAND: NO
THREATENED AND ENDANGERED SPECIES:
WATER RESOURCE: KEDRON BROOK
WETLANDS: NO

1.3 RISK EVALUATION

THIS PROJECT DOES NOT FALL UNDER THE JURISDICTION OF GENERAL PERMIT 3-9020 FOR STORMWATER RUNOFF FROM CONSTRUCTION SITES. SHOULD CHANGES PRIOR TO OR DURING CONSTRUCTION RESULT IN ONE OR MORE ACRES OF EARTH DISTURBANCE OR SHOULD THE PROJECT BECOME PART OF A LARGER PLAN OF DEVELOPMENT, THE CONTRACTOR WILL BE RESPONSIBLE FOR ANY ADDITIONAL PERMITTING.

1.4 EROSION PREVENTION AND SEDIMENT CONTROL

THESE EROSION CONTROL PLANS ARE MEANT AS A GUIDELINE FOR PREVENTING EROSION AND CONTROLLING SEDIMENT TRANSPORT. THE PRINCIPLES OUTLINED IN THIS NARRATIVE CONSIST OF APPLYING MEASURES THROUGHOUT CONSTRUCTION OF THE PROJECT IN ORDER TO MINIMIZE SEDIMENT TRANSPORT TO THE RECEIVING WATERS. THE MEASURES INCLUDE STABILIZATION AND STRUCTURAL PRACTICES, STORM WATER CONTROLS AND OTHER POLLUTION PREVENTION PRACTICES. THEY HAVE BEEN PROPOSED BY THE DESIGNER AS A BASIS FOR PROTECTING RESOURCES AND WILL NEED TO BE BUILT UPON BASED ON THE SPECIFIC MEANS AND METHODS OF THE CONTRACTOR. REFER TO THE LOW RISK SITE HANDBOOK AND APPROPRIATE DETAIL SHEETS FOR SPECIFIC GUIDANCE AND CONSTRUCTION DETAILING.

ALL MEASURES SHALL BE REGULARLY MAINTAINED AND SHALL BE CHECKED FOR SEDIMENT BUILD-UP. SEDIMENT SHALL BE DISPOSED OF AT AN APPROVED SITE WHERE IT WILL NOT BE SUBJECT TO EROSION.

1.4.1 MARK SITE BOUNDARIES

SITE BOUNDARIES AND AREAS CONSTRUCTION EQUIPMENT CAN ACCESS SHALL BE DELINEATED.

TO ADEQUATELY PROTECT THE SECTION 4(F) AND HISTORIC ALONG THE SOUTHWEST AND NORTHWEST CORNERS BARRIER FENCE SHALL BE USED TO DEMARCATE THE PROJECT LIMITS.

1.4.2 LIMIT DISTURBANCE AREA

PREVENTING INITIAL SOIL EROSION BY MINIMIZING THE EXPOSED AREA IS MUCH MORE EFFECTIVE THAN TREATING ERODED SEDIMENT. EARTH DISTURBANCE CAN BE MINIMIZED THROUGH CONSTRUCTION PHASING BY ONLY OPENING UP EARTH AS NECESSARY. THIS CAN LIMIT THE AREA THAT WILL BE DISTURBED AND EXPOSED TO EROSION. EMPLOY TEMPORARY CONSTRUCTION STABILIZATION PRACTICES IN INCREMENTAL STAGES AS PHASES CHANGE. FOR PROJECTS WHICH FALL UNDER THE CONSTRUCTION GENERAL PERMIT, ONLY THE ACREAGE LISTED ON THE PERMIT AUTHORIZATION MAY BE EXPOSED AT ANY GIVEN TIME.

MAINTAINING VEGETATED BUFFERS ALONG STREAM BANKS, WETLANDS OR OTHER SENSITIVE AREAS IS A CRUCIAL EROSION AND SEDIMENT CONTROL MEASURE THAT SHOULD BE ESTABLISHED WHEREVER POSSIBLE.

1.4.3 SITE ENTRANCE/EXIT STABILIZATION

TRACKING OF SEDIMENT ONTO PUBLIC HIGHWAYS SHALL BE MNIMIZED TO REDUCE THE POTENTIAL FOR RUNOFF ENTERING RECEIVING WATERS. INSTALLATION SHALL COINCIDE WITH THE CONTRACTOR'S PROGRESS SCHEDULE.

STABILIZED CONSTRUCTION ENTRANCES SHALL BE INSTALLED AS PROPOSED ON THE EPSC PLAN AND ANYWHERE EQUIPMENT WILL BE GOING FROM AREAS OF EXPOSED SOILS TO PAVED SURFACES.

1.4.4 INSTALL SEDIMENT BARRIERS

SEDIMENT BARRIERS SHALL BE UTILIZED TO INTERCEPT RUNOFF AND ALLOW SUSPENDED SEDIMENT TO SETTLE OUT. THEY SHALL BE INSTALLED PRIOR TO ANY UP SLOPE WORK.

SILT FENCE WILL BE INSTALLED AS PROPOSED ON THE EPSC PLAN.

1.4.5 DIVERT UPLAND RUNOFF

DIVERSIONARY MEASURES SHALL BE USED TO INTERCEPT RUNOFF FROM ABOVE THE CONSTRUCTION AND DIRECT IT AROUND THE DISTURBED AREA SO THAT CLEAN WATER DOES NOT BECOME MUDDIED WHILE TRAVELING OVER EXPOSED SOILS ON THE CONSTRUCTION SITE.

THE IMMEDIATE PROJECT AREA IS NOT LIKELY TO BE IMPACTED BY RUNOFF FROM UPSLOPE AREAS. THEREFORE, IT IS NOT ANTICIPATED THAT DIVERSION MEASURES WILL BE NECESSARY. CONTRACTOR TO INSTALL DIVERSION MEASURES IF IT IS NECESSARY.

1.4.7 CONSTRUCT PERMANENT CONTROLS

PERMANENT STORMWATER TREATMENT DEVICES SHALL BE INSTALLED AS SHOWN ON THE PLANS AND IN ACCORDANCE WITH PERMIT CONDITIONS.

THERE ARE NO PERMANENT STORM WATER TREATMENT DEVICES ANTICIPATED ON THIS PROJECT.

1.4.8 STABILIZE EXPOSED SOILS DURING CONSTRUCTION

ALL AREAS OF DISTURBANCE MUST HAVE TEMPORARY STABILIZATION IN PLACE WITHIN 48 HOURS OF DISTURBANCE OR IN ACCORDANCE WITH THE CONSTRUCTION GENERAL PERMIT 3-9020 AUTHORIZATION.

SURFACE ROUGHENING OF ALL EXPOSED SLOPES, COMBINED WITH TEMPORARY MULCHING, SHALL BE UTILIZED ON A REGULAR BASIS. BIODEGRADABLE EROSION CONTROL MATTING OR AN EQUIVALENT SHALL BE USED TO STABILIZE ALL SLOPES STEEPER THAN 1:3.

THE FORECAST OF RAINFALL EVENTS SHALL TRIGGER IMMEDIATE PROTECTION OF EXPOSED SOILS.

1.4.9 WINTER STABILIZATION

VARIOUS MEASURES SPECIFIC TO WINTER MAY BE NECESSARY SHOULD THE PROJECT EXTEND INTO WINTER (OCTOBER 15 THROUGH APRIL 15). REFER TO THE LOW RISK SITE HANDBOOK FOR GUIDANCE.

1.4.10 STABILIZE SOIL AT FINAL GRADE

EXPOSED SOIL MUST BE STABILIZED WITHIN 48 HOURS OF REACHING FINAL GRADE.

SODD SHALL BE USED TO ESTABLISH PERMANENT VEGETATION. FOR SLOPES STEEPER THAN 1:3, BIODEGRADABLE EROSION CONTROL MATTING OR AN EQUIVALENT SHALL BE USED INSTEAD OF MULCH.

1.4.11 DE-WATERING ACTIVITIES

DISCHARGE FROM DEWATERING ACTIVITIES THAT FLOWS OFF OF THE CONSTRUCTION SITE MUST NOT CAUSE OR CONTRIBUTE TO A VIOLATION OF THE VERMONT WATER QUALITY STANDARDS.

DEWATERING IS NOT ANTICIPATED FOR THIS PROJECT.

1.4.12 INSPECT YOUR SITE

INSPECT THE PROJECT SITE BASED ON SPECIAL PROVISION REQUIREMENTS OR CONSTRUCTION GENERAL PERMIT AUTHORIZATION STIPULATIONS.

1.5 SEQUENCE AND STAGING

THIS SECTION WILL BE DEVELOPED BY THE CONTRACTOR USING THE GUIDANCE OUTLINED IN THE VTRANS EPSC PLAN CONTRACTOR CHECKLIST.

1.5.1 CONSTRUCTION SEQUENCE

1.5.2 OFF-SITE ACTIVITIES

IN ADDITION TO THE CONTRACTOR CHECKLIST ANY ACTIVITIES OUTSIDE THE CONSTRUCTION LIMITS SHALL FOLLOW SUBSECTIONS 105.25- 105.29 OF THE STANDARD SPECIFICATIONS FOR CONSTRUCTION.

STATE OF VERMONT
AGENCY OF TRANSPORTATION

RIGHT - OF - WAY DETAIL SHEET

TABLE OF PROPERTY ACQUISITION

PARCEL NO.	PROPERTY OWNER	ROW LAYOUT NO.	BEGINNING STATION	ENDING STATION	TAKE AREA±	REMAINDER AREA±	RIGHT TYPE	RIGHT T / P	RIGHT AREA ±	RECORDING DATA TITLE	RECORDING DATA DATE	RECORDING DATA TOWN / CITY	RECORDING DATA BOOK	RECORDING DATA PAGE	REMARKS
1	UNITED STATES POSTAL SERVICE	1	334+37 LT	334+91 LT			CONSTRUCTION	T	112 SF						INCL. BF & EC
			334+39 LT	334+88 LT			SLOPE	T	214 SF						
2	BYRNE, MARILYN L. - TRUSTEE OF THE	1	335+12.47 LT	335+28.90 LT			INSTALL & MAINTAIN	P							BRIDGE STEM & RAILING
	"MARILYN L. BYRNE 2015 REVOCABLE		335+12 LT	335+35 LT			SLOPE	T	184 SF						
	TRUST", U.T.A. JANUARY 12, 2015		335+12.92 LT	335+35.42 LT			REMOVE & RESET	T							PATIO BRICK
			335+29 LT				REMOVE & RESET	T							SIGN
			335+36 LT				INSTALL	T							BF
3	EL-KAM REALTY CO., LESSOR;	1	334+52 RT	334+56 RT			INSTALL	T							EC
	COLLECTIVE - THE ART OF CRAFT, LESSEE		334+59 RT				REMOVE & DISCONNECT	T							SIGN & ELECTRICAL
			334+63.13 RT				REMOVE & RESET	T							RETAINING WALL
			334+62 RT	334+72 RT			SLOPE	T	26 SF						
			334+63 RT				REMOVE & REPLACE	T							FENCE
4	GREEN MOUNTAIN POWER CORPORATION		334+37 LT	335+36 LT											UTILITY
5	TELEPHONE OPERATING COMPANY OF VERMONT LLC		334+37 LT	335+36 LT											UTILITY
6	COMCAST OF CONNECTICUT/GEORGIA/ MASSACHUSETTS/NEW HAMPSHIRE/ NEW YORK/NORTH CAROLINA/VIRGINIA/ VERMONT, LLC		334+37 LT	335+36 LT											UTILITY
7	WOODSTOCK AQUADUCT COMPANY		334+37 LT	335+36 LT											UTILITY
8	TOWN OF WOODSTOCK		334+37 LT	335+36 LT											UTILITY

TABLE OF REVISIONS

REVISION NO.	ROW SET SHEET #	DESCRIPTION	DATE
1	3, 4	PARCEL 2, BYRNE - ADD REMOVE & RESET	12/22/16
		(T) FOR SIGN.	
		REV BY: MT CO 10186 APPR BY: RC	
2	3, 4	PARCEL 3, EL-KAM - ELIMINATE	01/19/17
		THE VERMONT STANDARD, INC., LESSEE;	
		PI BRICK OVEN TRATTORIA, LESSEE	
		FROM PROPERTY OWNER.	
		REV BY: MT CO 10190 APPR BY: RC	

PROJECT NAME: WOODSTOCK VILLAGE
PROJECT NUMBER: BF 020-2(43)

FILE NAME: r13j280detail.xls
PROJECT LEADER: R. YOUNG, P.E.
DESIGNED BY: A. PROULX
R.O.W. DETAIL SHEET #1

PLOT DATE: 11-APR-2017
DRAWN BY: M. TROTTIER
CHECKED BY: S. PATTERSON
SHEET 50 OF 51

PORTLAND CEMENT
CONCRETE SIDEWALK
STA 334+39.0 - 335+35.4 LT
STA 333+88.6 - 335+05.0 RT

VERTICAL GRANITE CURB
STA 334+39.0 - 334+72.0 LT
STA 333+88.6 - 334+28.2 RT
STA 335+06.4 - 335+35.4 LT
STA 334+74.4 - 335+05.0 RT

REHAB, DROP INLET, CATCH
BASIN, OR MANHOLES CLASS I
STA 334+18.74 RT
STA 334+51.56 LT
STA 335+11.68 RT
STA 335+20.01 LT

REMOVE AND REBUILD
STONE RETAINING WALL
STA 334+63.13 RT

SPECIAL PROVISION (REMOVE
AND RESET PATIO BRICK)
STA 335+13.19 - 335+35.42 LT

ITEM 656.85
TREE PROTECTION
STA 334+44.86 LT
STA 335+30.50 LT

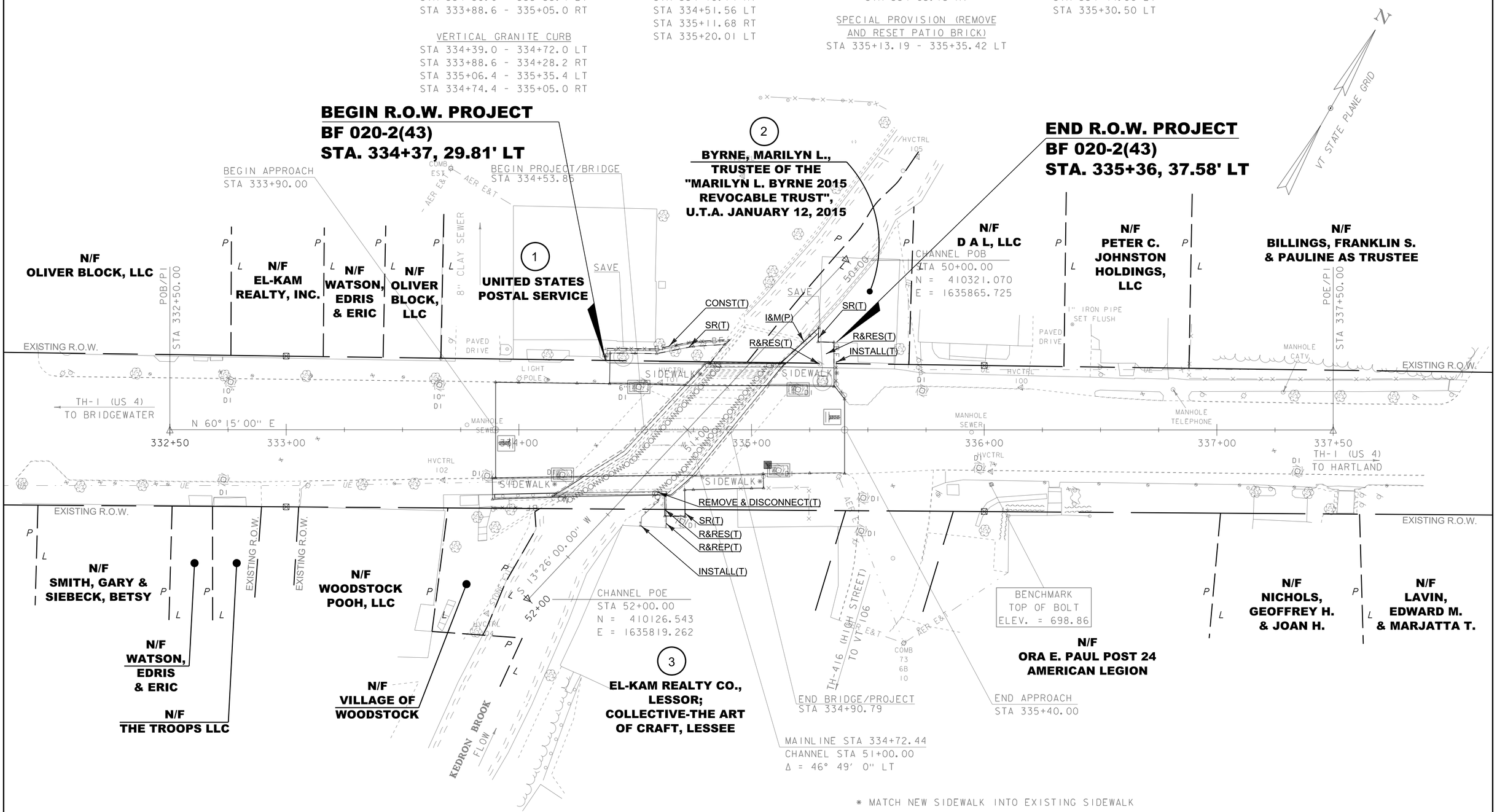

* MATCH NEW SIDEWALK INTO EXISTING SIDEWALK

ADJUST BEGIN AND END APPROACHES IN FIELD TO COINCIDE WITH PORTLAND CONCRETE PAVEMENT JOINT.
ADJUST BEGIN AND END LOCATIONS OF PORTLAND CEMENT CONCRETE SIDEWALKS AND VERTICAL GRANITE CURBS TO COINCIDE WITH JOINT LOCATIONS.

CONCRETE T-BEAM BRIDGE
BUILT 1935
34' SPAN
57' FASCIA TO FASCIA

LINES SHOWN ON THIS PLAN AS EXISTING PROPERTY LINES P/L ARE BELIEVED TO BE ACCURATE BUT SHOULD NOT BE RELIED UPON FOR PURPOSES UNRELATED TO THE VILLAGE OF WOODSTOCK'S ACQUISITION OF LAND AND RIGHTS FOR THIS PROJECT.

FOR R.O.W. USE ONLY

SCALE 1" = 20'-0"
20 0 20

PROJECT NAME: WOODSTOCK VILLAGE
PROJECT NUMBER: BF 020-2(43)

FILE NAME: s13j280rowlay.dgn
PROJECT LEADER: R. YOUNG
DESIGNED BY: S. COLEY
R.O.W. LAYOUT SHEET 1 OF 1

PLOT DATE: 11-APR-2017
DRAWN BY: A. PROULX
CHECKED BY: S. PATTERSON
SHEET 51 OF 51